LINCOLN

Consistency You Can Count On

# Impinger® II Express easyTouch & Digital

## Series 1100 Series Conveyor Oven

## Domestic / International Service Manual

**GAS AND ELECTRIC OVENS FOR USA AND NON-USA COUNTRIES**


Original Document

Document #: LIN_EOGO_SM_IMPII_S1100_4608349 – 01/22

WELBILT

THIS PAGE INTENTIONALLY LEFT BLANK

## Safety Notices

### DEFINITIONS

**⚠ DANGER**

Indicates a hazardous situation that, if not avoided, will result in death or serious injury. This applies to the most extreme situations.

**⚠ Warning**

Indicates a hazardous situation that, if not avoided, could result in death or serious injury.

**⚠ Caution**

Indicates a hazardous situation that, if not avoided, could result in minor or moderate injury.

**Notice**

Indicates information considered important, but not hazard-related (e.g. messages relating to property damage).

NOTE: Indicates useful, extra information about the procedure you are performing.

## Read These Before Proceeding:

**⚠ DANGER**

Do not install or operate equipment that has been misused, abused, neglected, damaged, or altered/ modified from that of original manufactured specifications.

**Important**

Read these instructions for use carefully so as to familiarize yourself with the appliance before connecting it to its gas container. Keep these instrucions for future reference.

**⚠ Warning**

Improper installation adjustment, alteration, service or maintenance can cause property damage, injury or death. Read the installation, operating and maintenance instructions thoroughly before installing or servicing this equipment.

**⚠ Warning**

Authorized Service Representatives are obligated to follow industry standard safety procedures, including, but not limited to, local/national regulations for disconnection / lock out / tag out procedures for all utilities including electric, gas, water and steam.

**⚠ Warning**

This appliance is not intended for use by persons (including children) with reduced physical, sensory or mental capabilities, or lack of experience and knowledge, unless they have been given supervision concerning use of the appliance by a person responsible for their safety. Do not allow children to play with this appliance.

**⚠ Warning**

This equipment is intended for indoor use only. Do not install or operate this equipment in outdoor areas.

**⚠ Warning**

Do not use electrical appliances or accessories other than those supplied by the manufacturer.

FOR YOUR SAFETY

Do Not Store Or Use Gasoline Or Other Flammable Vapors Or Liquids In The Vicinity Of This Or Any Other Appliance.

**⚠ Warning**

Never use a high-pressure water jet for cleaning or hose down or flood interior or exterior of units with water. Do not use power cleaning equipment, steel wool, scrapers or wire brushes on stainless steel or painted surfaces.

**⚠ Caution**

Maintenance and servicing work other than cleaning as described in this manual must be done by authorized service personnel.

**⚠ Caution**

Improper cleaning of oven could damage catalyst(s) in ventless models and will void unit warranty.

NOTE: Proper installation, care and maintenance are essential for maximum performance and trouble-free operation of your equipment. Visit our website www.wbtkitchencare.com for manual updates, translations, or contact information for service agents in your area.

THIS PAGE INTENTIONALLY LEFT BLANK

# Table of Contents

# Section 1
# General Information

## Model Number Key

Example: 1133-005-E-K1801

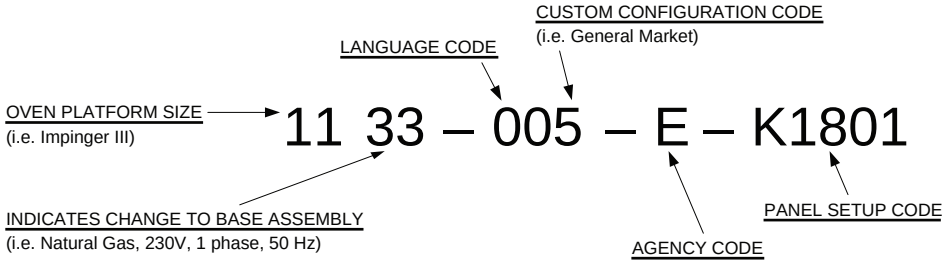


### Language Code

| Code | Language | Country |
|---|---|---|
| 0 | English | Dom. & Int. Default |
| B | French | CE – France/Luxembourg |
| C | German | CE – Germany |
| D | Italian | CE – Italy |
| E | Spanish | CE – Spain |
| F | English | CE – UK/India/Africa/Hungary |
| G | Spanish | Mexico/Latin America |
| H | Portuguese | CE – Portugal |
| I | Not Used | --- |
| J | Danish | CE – Denmark |
| K | Dutch & French | CE – Belgium |
| L | Dutch | CE – Netherlands |
| M | Greek | CE – Greece |
| N | Finnish | CE – Finland |
| O | Restricted | --- |
| P | Norwegian | CE – Norway |
| Q | English | Japan |
| R | Swedish | CE – Sweden |
| S | English | Australia |
| T | Mandarin | China |
| U | Restricted | --- |
| V | English | Pacific Rim/Korea |
| W | English | Middle East/Africa |
| X | Not Used | --- |
| Y | Not Used | --- |
| Z | Not Used | --- |

### Agency Code

| Code | Agency |
|---|---|
| N | No agency |
| E | CE & RoHS compliance combined |
| U | US & Canada compliance only |
| A | Advantage style oven |
| B | Australia AGA |

### OLD MODEL NUMBERS EXAMPLES

Please note that the model numbering system changed March 2007. The chart below shows the old model numbering system and its matching new model number.

Please see Page 3 for complete list.

| Old Model Number | → | New Model Number |
|---|---|---|
| 1116-080-A (or A1) | → | 1116-00z-U-Kxxxx |
| 1132-080-A (or A1) | → | 1132-00z-U-Kxxxx |
| 1161-080-A | → | 1131-00z-U-Kxxxx |
| 1154-080-EA | → | 1154-z00-U-Kxxxx |
| 1164-000-EA | → | 1164-z00-U-Kxxxx |

## 1100 Series Model Number

| Old Model | | Current Model | | Input Rate | Voltage | Current | Phase | Hz | #, Supply Wires |
|---|---|---|---|---|---|---|---|---|---|
| 1116-080-A<br>1116-062-A<br>1116-023-A | → | 1116-xxx-U | Natural | 40,000 BTU/Hr.<br>11.7 kW/42.2 | 120 | 7 | 1 | 60 | 3, 1 Pole+N+G |
| 1116-080-A1 | → | 1116-037-U | | | | 7 | 1 | | 3, 1 Pole+N+G |
| 1154-000-EA<br>1154-080-EA | → | 1154-xxx-E | | | 230 | 2 | 1 | 50 | 3, 2 Pole+G |
| 1154-V80-EA | → | 1157-xxx-N | | | 220 | 2 | 1 | 60 | 3, 2 Pole+G |
| N/A | | 1178-xxx-U | | | 120 | 7 | 1 | 60 | 3, 1 Pole+N+G |
| 1117-080-A<br>1117-023-A | → | 1117-xxx-U | LP | | 120 | 7 | 1 | 60 | 3, 1 Pole+N+G |
| 1117-080-A1 | → | 1117-037-U | | | | 7 | 1 | | 3, 1 Pole+N+G |
| 1155-000-EA<br>1155-080-EA | → | 1155-xxx-E | | | 230 | 2 | 1 | 50 | 3, 2 Pole+G |
| 1155-V80-EA | → | 1158-xxx-N | | | 220 | | 1 | 60 | 3, 2 Pole+G |
| 1130-080-A<br>1130-080-A1 | → | 1130-xxx-U | Electric | 10kW | 208 | 48 | 1 | 60 | 3, 2 Pole+G |
| 1130-08H-A | | N/A | | | | 48 | 1 | | 3, 2 Pole+G |
| 1131-080-A<br>1161-080-A | → | 1131-xxx-U | | | 240 | 42 | 1 | 60 | 3, 2 Pole+G |
| 1131-080-A1 | → | 1131-037-U | | | | 42 | 1 | | 3, 2 Pole+G |
| 1131-08H-A | | N/A | | | | 42 | 1 | | 3, 2 Pole+G |
| 1132-080-A<br>1132-023-A<br>1162-080-A | → | 1132-xxx-U | | | 208 | 28 | 3 | 60 | 4, 3 Pole+G |
| 1132-080-A1 | → | 1132-037-U | | | | 28 | 3 | | 4, 3 Pole+G |
| 1132-08H-A | → | 1172-xxx-U | | | | 28 | 3 | | 4, 3 Pole+G |
| 1132-002-A | → | 1174-xxx-U | | | | 28 | 3 | | 4, 3 Pole+G |
| 1133-080-A<br>1133-080-A1 | → | 1133-xxx-U | | | 240 | 25 | 3 | 60 | 4, 3 Pole+G |
| 1133-08H-A | → | 1173-xxx-U | | | | 25 | 3 | | 4, 3 Pole+G |
| N/A | | 1134-xxx-N | | | 380/208 | 16 | 3 | 50 | 5, 3 Pole+N+G |
| N/A | | 1135-xxx-U | | | 480 | 15 | 3 | 60 | 4, 3 Pole+G |
| 1164-000-EA<br>1164-080-EA | → | 1164-xxx-E | | | 400/230 | 15 | 3 | 50 | 5, 3 Pole+N+G |

## Gas Pressure Conversion

| Inches of Water Column | kPa | m-Bar | Millimeters of Water Column |
|---|---|---|---|
| 3.5 | 0.87 | 8.70 | 88.9 |
| 4.5 | 1.12 | 11.2 | 114.3 |
| 7 | 1.74 | 17.40 | 177.8 |
| 8 | 1.99 | 19.90 | 203.2 |
| 9.2 | 2.29 | 22.90 | 233.7 |
| 10 | 2.48 | 24.87 | 254.0 |
| 10.5 | 2.61 | 26.11 | 266.7 |
| 11 | 2.73 | 27.36 | 279.4 |
| 14 | 3.48 | 34.81 | 355.6 |
| 14.5 | 3.61 | 36.05 | 368.3 |

## Utility Service Layout – Models 1116 & 1117

Gas and electrical services for the Models 1116 and 1117 should be located as shown below. If flexible services are provided, they must meet code requirements for such installation.

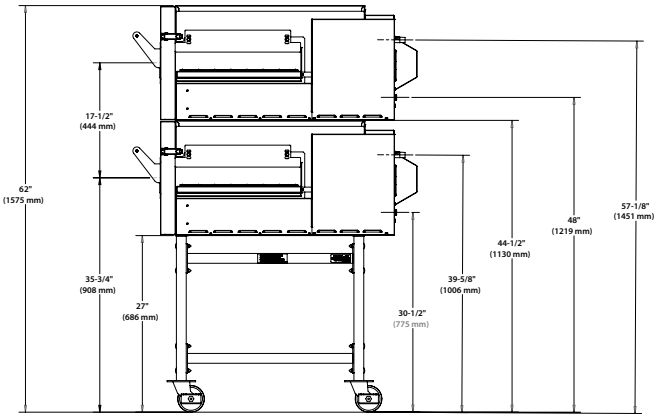


**Side view of two Impinger® II Gas Ovens showing Gas Valve Installation point and piping spacing.**

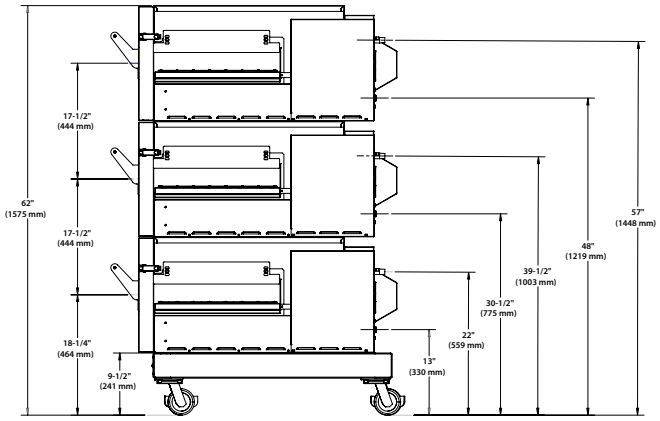


**Side view of three Impinger® II Gas Ovens showing Gas Valve Installation point and piping spacing.**

## Purchaser's Responsibility:

It is the responsibility of the purchaser:

1. To see that the gas and electric services for the oven are installed on site in accordance with the manufacturer'sspecification.
2. To unload, uncrate, and install the oven in its proper location; in accordance with this service manual.
3. To see that the gas and electric services are connected properly by a qualified installer of your choice. For installation in the State of Massachusetts: Installation of this oven must be performed by a licensed plumber or gas fitter. All such connections must be in accordance with applicable code requirements.
4. Arrange for inspection and operation check-out by an Authorized Service Technician. Do not attempt to operate the oven until connection of utility service has been fully inspected by a Factory Authorized Servicer or a Lincoln Foodservice Products, LLC Service Representative. This service is required by LincolnFoodservice Products, LLC in order to assist the purchaser in proper start-up of the oven on site. Please note the specific details on the Warranty and make certain connections are made to proper utility services.The warranty shall not apply if the oven(s) are started up and operated prior to the utilities and oven being inspected and check-out made by a Factory Authorized Servicer or a Lincoln Foodservice Products, LLC Service Representative.

# Section 2
# Operation

## Sequence of Operation – Impinger II Domestic Advantage Digital, Gas

**S/N: 2038616 to S/N: 2106100101444 (Ovens with push button controls)**

| Old Model Number | → | New Model Number | Gas Type | Voltages | Hz | Phase |
|---|---|---|---|---|---|---|
| 1116-080-A (or A1) | → | 1116-xxx-U | Natural | 120 VAC | 60 HZ | 1 |
| 1116-062-8A | | | | | | |
| 1116-023-A | | | | | | |
| | | 1178-xxx-U | Natural | | | |
| 1117-080-A (or A1) | → | 1117-00z-U<br>1117-xxx-U | LP Gas | | | |
| 1117-023-A | | | | | | |

| | |
|---|---|
| **POWER SUPPLY** | Electrical power is supplied to the oven by a three-conductor cord set.<br>Voltage from the black conductor to the white conductor is 120VAC.<br>Black conductor is hot.<br>White conductor is neutral.<br>Green conductor is ground. |
| **CONTROL BOX AUTO COOL DOWN** | When the temperature in the control boxes reaches 120°F ±3° (49°C ± 1.7°), the cooling fan thermostat will switch power to the cooling fans. The thermostat will interrupt power to the cooling fans when the temperature falls to 100°F ± 3° (37°C ± 1.7°). |
| **MAIN FAN CIRCUIT** | Power is permanently supplied, through a 10 amp fuse, to the normally open main power switch. Power is also supplied to the normally open cooling fan thermostat. Closing the main power switch supplies 120VAC to the main fan motor, the cooling fan motors, the primary of the control transformer, the conveyor motor and to the ignition control. |
| **BURNER CIRCUIT** | Closing the main power switch supplies 120VAC to the burner blower motor. 120VAC is also supplied, through the main fan centrifugal switch (this switch closes when the main fan reaches approx. 1600 RPM) and the normally closed oven cavity hi-limit thermostat, to the primary of the burner transformer. 120VAC is also supplied to the oven control. |
| **IGNITION CONTROL** | The ignition control operates on both 24VAC and 120VAC. When the control is energized by 24VAC from the transformer, 120VAC is switched by the ignition control to the hot surface igniter for 45 seconds for the hot surface igniter warm up. The igniter glows red, 24VAC is switched to the gas valve, which opens, and ignition should now occur. |
| **TEMPERATURE CONTROL** | Closing the oven power switch supplies line voltage, through the 10A fuse, through the oven power relay, to the primary of the control transformer. 24VAC is supplied to the oven control. The oven control is set to desired temperature. The right thermocouples will provide varying millivolts to the oven control. The oven control supplies line voltage to the temperature regulation valve at intermittent intervals to maintain desired temperature. The display on the oven control will indicate when the temperature regulation valve is energized. NOTE: The display also indicates oven temperature of the oven. |
| **CONVEYOR DRIVE** | Closing the oven power switch supplies line voltage, through the 10A fuse, through the oven power relay to the conveyor motor and to the primary of the control transformer. Secondary voltage, 24VAC, is supplied to the oven control. Setting the oven control to the desired time outputs voltage, through a reversing switch, to the conveyor motor. NOTE: The conveyor system uses a magnet and Hall Effect sensor to prove operation of the conveyor motor. If the conveyor motor is not running, "**BELT JAM**" is indicated on the display. |

## Sequence of Operation – Impinger II Domestic 1116,1117 easyTouch, Gas

**S/N: 2106100101445 and above (easyTouch controls)**

**Unit Plugged Into Power**

- F1 fuse energized with L1
- Main Rocker Power Switch Input Energized with L1 and Neutral. Green Light ON

  Note: Green light will not be implemented with

  first generation units
- Cooling Fan Thermostat energized with L1
- Blower Main and Cooling Fans energized with Neutral

**Power Switch Turned ON**

- Blower Main energized with L1
- Blower Burner energized with L1 and Neutral Power
- Cooling Fans energized with L1
- IO Board on-board SSR/Relay (COM) energized with L1
- High Heat Valve energized with Neutral Power
- Ignition Module L1 and L2 energized with L1 and Neutral Power
- Cooling Fan Thermostat energized with L1
- Thermal capillary disc energized with L1
- Transformer energized with L1 and Neutral Power (If both Thermal capillary disc and Blower Main centrifugal switch are not tripped)
- Ignition Module input energized with 24VAC (If Blower Burner centrifugal switch is not tripped)
- 24VDC Power Supply Energized with L1 and Neutral Power
- DC 4A fuse Energized, which protects the DC components: UI and IO board
- IO Board Energized
- IO Board boots up UI
- UI initiates with Welbilt BOOT screen
- UI Loads to Home Screen after small delay in time
- Optional Motor Drive Energized with 24VDC

**Press and Go Selected**

- UI displays Recipes
- Recipe Selected
- Once Pre-Heating is complete, Recipe Mode is engaged
- Oven will maintain temperature set point
- Conveyor will turn on to recipe cook time speed

**Chef Mode (Manual Mode) Selected**

- Enter Temperature Set Point
- Enter Conveyor belt speed (min:sec)
- In this mode, temperature and motor speed values will change automatically when on this screen, but these set points can be saved into a recipe when the save button is pressed
- Blower Main and Cooling Fans energized with Neutral Power
- Save Button Pressed

  Select Recipe

  Change icon or color if applicable

  Press the save button

  NOTE: See Section 5 - Wiring Schematics

  for reference.

## Sequence of Operation – Impinger II International Advantage Digital, Gas

**(Ovens with push button controls) S/N: 21111001007 and Below**

| Old Model Number | → | New Model Number | Gas Type | Voltages | Hz | Phase |
|---|---|---|---|---|---|---|
| 1154-000-EA | → | 1154-xxx-E | Natural | 230VAC | 50 Hz | 1 |
| 1154-080-EA | | | | | | |
| 1154-V80-EA | → | 1157-xxx-N | | 220 VAC | 60 Hz | |
| 1155-000-EA | → | 1155-xxx-E | LP Gas | 230 VAC | 50 Hz | |
| 1155-080-EA | | | | | | |
| 1155-V80-EA | → | 1158-xxx-N | | 220 VAC | 60 Hz | |

| | |
|---|---|
| **POWER SUPPLY** | Electrical power to be supplied to the oven by a three-conductor service. |
| **CONTROL BOX AUTO COOL DOWN** | When the temperature in the control box reaches 120°F ±3° (49°C ± 1.7°), the cooling fan thermostat will switch power to the cooling fans. The thermostat will interrupt power to the cooling fans when the temperature falls to 100°F ± 3° (37°C ± 1.7°). |
| **MAIN FAN CIRCUIT** | Power is permanently supplied through a 10 amp oven fuse to the normally open double pole oven fan switch. Closing the oven fan switch supplies line voltage to the main fan motor. Closing the main fan switch also supplies voltage to the cooling fans and the EMI Filter to the primary of the control transformer, the conveyor motor, and the burner system. |
| **BURNER CIRCUIT** | Closing the oven fan switch supplies line voltage through the normally open air pressure switch (closed by the air pressure from the main fan), through the normally closed oven cavity hi-limit thermostat (opens at 662°F, 350°C), and to the ignition control. |
| **IGNITION CONTROL** | The ignition control switches line voltage to the combustion blower motor. The combustion air pressure switch switches from normally closed to normally open upon sensing air pressure in the burner housing. After a pre-purge period of between 30 and 60 seconds, the spark is energized, the main gas valve and the burner pilot light are energized, and ignition should now occur. |
| **TEMPERATURE CONTROL** | When the power supply is passed through the EMI Filter the load will supply line voltage to the primary of the control transformer. Secondary voltage, 24VAC, is supplied to the oven control. The oven control is set to desired temperature. The thermocouple will provide varying millivolts to the oven control. The oven control supplies line voltage to the temperature regulation valve at intermittent intervals to maintain the desired temperature. The display on the oven control will indicate when the temperature regulation valve is energized. NOTE: The display also indicates oven temperature. |
| **CONVEYOR DRIVE** | When the power supply is passed through the EMI Filter the load will supply line voltage to the primary of the control transformer. Secondary voltage, 24VAC, is supplied to the oven control. Setting the oven control to the desired time outputs voltage, through a reversing switch, to the conveyor motor.<br>NOTE: The conveyor system uses a Hall Effect sensor and magnet to prove operation of the conveyor motor. If the conveyor motor is not running, "**BELT JAM**" is indicated on the display. |

## Sequence of Operation – Impinger II International 1154,1155 easyTouch Gas

**S/N: 2111100101008 and above (easyTouch controls)**

### Unit Plugged Into Power

- F1 fuse energized with L1
- Main Rocker Power Switch Input Energized with L1 and Neutral Power. Green Light ON

  Note: Green light will not be implemented with

  first generation units
- Cooling Fan Thermostat energized with L1
- Blower Main and Cooling Fans energized with Neutral Power

### Power Switch Turned ON

- Blower Main energized with L1
- Cooling Fans energized with L1
- IO Board on-board SSR/Relay (COM) energized with L1
- High Heat Valve energized with Neutral Power
- Cooling Fan Thermostat is energized with L1
- Air Pressure Switch Main energized with L1
- Thermal capillary disc is energized with L1 (If the air pressure switch is not tripped)
- Ignition Module input energized with L1 and N (If APS1 and TH2 are not tripped). The Ignition Module provides power to the Blower Burner and to Main Valve
- 24VDC Power Supply Energized with L1 and Neutral Power
- DC 4A fuse Energized, which protects the DC components: UI and IO board
- IO Board Energized
- IO Board boots up UI
- UI initiates with Welbilt BOOT screen
- UI Loads to Home Screen after small delay in time
- Optional Motor Drive  Energized with 24VDC

### Press and Go Selected

- UI displays Recipes
- Recipe Selected
- Once Pre-Heating is complete, Recipe Mode is engaged
- Oven will maintain temperature set point
- Conveyor will turn on to recipe cook time speed

### Chef Mode (Manual Mode) Selected

- Enter Temperature Set Point
- Enter Conveyor belt speed (min:sec)
- In this mode, temperature and motor speed values will change automatically when on this screen, but these set points can be saved into a recipe when the save button is pressed.
- Blower Main and Cooling Fans energized with Neutral Power
- Save Button Pressed

  Select Recipe

  Change icon or color if applicable

  Press the save button

  NOTE: See Section 5 - Wiring Schematics

  for reference.

## Sequence of Operation – Impinger II International (Korea) 1157,1158 easyTouch, Gas

**S/N: 2111100101008 and above (easyTouch controls)**

**Unit Plugged Into Power**

- Power Failure Alarm Relay common terminals energized with L1
- Power Failure Alarm Relay coil energized with Neutral Power
- Push Button, Reset Alarm (PB2) energized with L1
- Alarm energized with L1 and Neutral Power

**Unit plugged into power, PB2 pressed one time and no power failure during machine operation**

- After pressing Push Button, Reset Alarm one time, the Power Failure Alarm Relay activates, bypassing PB2 and disconnecting the alarm. The K1 coil will stay energized unless there is a power failure
- F1 fuse energized with L1
- Main Rocker Power Switch input energized with L1 and Neutral. The green light ON. Note: Green light will not be implemented with first generation units.
- Cooling Fan Thermostat energized with L1
- Blower Main and Cooling Fans energized with Neutral Power

**Power Switch Turned ON**

- Blower Main energized with L1
- Cooling Fans energized with L1
- IO Board on-board SSR/Relay energized with L1
- High Heat Valve energized with Neutral Power
- Cooling Fan Thermostat energized with L1
- Air Pressure Switch Main energized with L1
- Thermal capillary disc energized with L1 (If Air Pressure Switch is not tripped).
- Ignition Module input energized with L1 and Neutral Power (If Air Pressure Switch and Thermal capillary are not tripped). The Ignition Module provides power to the Blower Burner and to Main Valve
- 24VDC Power Supply is energized with L1 and Neutral Power
- DC 4A fuse is energized, which protects the DC components "UI and IO boards"
- IO Board energized
- IO Board boots up UI
- UI initiates with Welbilt BOOT screen
- UI Loads to Home Screen after small delay in time
- Optional Motor Drive Energized with 24VDC

**Press and Go Selected**

- UI displays Recipes
- Recipe Selected
- Once Pre-Heating is complete, Recipe Mode is engaged
- Oven will maintain temperature set point
- Conveyor will turn on to recipe cook time speed

**Chef Mode (Manual Mode) Selected**

- Enter Temperature Set Point
- Enter Conveyor belt speed (min:sec)
- In this mode, temperature and motor speed values will change automatically when on this screen, but these set points can be saved into a recipe when the save button is pressed.
- Blower Main and Cooling Fans energized with Neutral Power
- Save Button Pressed

  Select Recipe

  Change icon or color if applicable

  Press the save button

  NOTE: See Section 5 - Wiring Schematics

  for reference.

## Sequence of Operation – Impinger II Domestic Advantage Digital, Electric w/ Neutral

**S/N 0809210000016 & Below**

**(Ovens with push button controls)**

| Old Model Number | → | New Model Number | Voltages | Hz | Phase |
|---|---|---|---|---|---|
| 1130-080-A | → | 1130-xxx-U | 120/208 | 60 | 1 |
| 1130-080-A1 | | | | | |
| 1130-08H-A | | N/A | | | |
| 1131-080-A | → | 1131-xxx-U | 120/240 | | |
| 1161-080-A | | | | | |
| 1131-080-A1 | → | 1131-037-U | | | |
| 1131-08H-A | | N/A | | | |
| 1132-080-A | → | 1132-xxx-U | 120/208 | | 3 |
| 1132-023-A | | | | | |
| 1162-080-A | | | | | |
| 1132-080-A1 | → | 1132-037-U | | | |
| 1132-08H-A | → | 1172-xxx-U | | | |
| 1132-002-A | → | 1174-xxx-U | | | |
| 1133-080-A | → | 1133-xxx-U | 120/240 | | |
| 1133-080-A1 | | | | | |
| 1133-08H-A | → | 1173-xxx-U | | | |

| | |
|---|---|
| **POWER SUPPLY** | Electrical power to be supplied to the oven by a three conductor service for single phase and a four conductor service for three phase.<br>Black conductor is hot.<br>Red conductor is hot.<br>Orange conductor is hot (used for three phase only).<br>White conductor is neutral.<br>Green conductor is ground. |
| **CONTROL BOX AUTO COOL DOWN** | When the temperature in the control box reaches 120°F ±3° (49°C ± 1.7°), the cooling fan thermostat will switch power to the cooling fans. The thermostat will interrupt power to the cooling fans when the temperature falls to 100°F ± 3° (37°C ± 1.7°). |
| **MAIN FAN CIRCUIT** | Power is permanently supplied through the 10 amp fuses, through the normally closed oven cavity hi-limit thermostat, to the normally open main power switch. Power is also supplied to the normally open cooling fan thermostat. Closing the main power switch energizes the coil of the oven start relay, it's contacts close enabling the 20 minute time delay relay. The 20 minute time delay relay supplies 120VAC to the oven fan relay, these normally open contacts now close supplying 208/240VAC to the main fan motor. 120VAC is also supplied to the cooling fans. 208/240VAC is supplied to the primary of the control transformer, the conveyor motor and, through the air pressure switch, to the oven control. |
| **TEMPERATURE CONTROL** | Closing the main power switch supplies 208/240VAC to the primary of the control transformer. Secondary voltage, 24VAC, is supplied to the oven control. The oven control is set to desired temperature. The thermocouple will provide varying millivolts to the oven control. The oven control supplies 208/240VAC to the coil of the heater relay at intermittent intervals to maintain the desired temperature. The display on the oven control will indicate when the heater relay is energized.<br>NOTE: The display also indicates oven temperature. |
| **CONVEYOR DRIVE** | Closing the main power switch supplies 208/240VAC to the conveyor motor and to the primary of the control transformer. Secondary voltage, 24VAC, is supplied to the oven control. Setting the oven control to the desired time outputs voltage, through a reversing switch, to the conveyor motor.<br>NOTE: The conveyor system uses a Hall Effect sensor and magnet to prove operation of the conveyor motor. If the conveyor motor is not running, "**BELT JAM**" is indicated on the display. |
| **AUTOMATIC COOL DOWN** | When the oven is started, the time delay relay timing circuit is enabled, permitting the oven fans to run approximately 20 minutes after the oven is shut off, to cool the oven. The time delay relay will keep the coil of the fan relay closed, maintaining operation of the main fan and cooling fans. |

## Sequence of Operation – Impinger II Domestic Advantage Digital, Electric w/o Neutral

### S/N 0809210000017 to S/N 2104100102812

### (Ovens with push button controls)

| Old Model Number | → | New Model Number | Voltages | Hz | Phase |
|---|---|---|---|---|---|
| 1130-080-A | → | 1130-xxx-U or (V) | 208 | 60 | 1 |
| 1130-080-A1 | | | | | |
| 1130-08H-A | | N/A | | | |
| 1131-080-A | → | 1131-xxx-U or (V) | 240 | | |
| 1161-080-A | | | | | |
| 1131-080-A1 | → | 1131-037-U | | | |
| 1131-08H-A | | N/A | | | |
| 1132-080-A | → | 1132-xxx-U or (V) | 208 | | 3 |
| 1132-023-8 | | | | | |
| 1162-080-A | | | | | |
| 1132-080-A1 | → | 1132-037-U | | | |
| 1132-08H-A | → | 1172-xxx-U | | | |
| 1132-002-8 | → | 1174-xxx-U | | | |
| 1133-080-A | → | 1133-xxx-U or (V) | 240 | | |
| 1133-080-A1 | | | | | |
| 1133-08H-A | → | 1173-xxx-U | | | |

| | |
|---|---|
| **POWER SUPPLY** | Electrical power to be supplied to the oven by a three conductor service for single phase and a four conductor service for three phase.<br>Black conductor is hot.<br>Red conductor is hot.<br>Orange conductor is hot (used for three phase only).<br>Green conductor is ground. |
| **CONTROL BOX AUTO COOL DOWN** | When the temperature in the control box reaches 120°F ± 3° (48.9°C ± 1.7°), the cooling fan thermostat will switch power to the control box cooling fans. The thermostat will interrupt power to the cooling fans when the control box temperature falls to 100°F ± 3° (37.8°C ± 1.7°). |
| **MAIN FAN CIRCUIT** | Power is permanently supplied through the 10 amp fuses, through the normally closed oven cavity hi-limit thermostat, to the normally open main power switch. Power is also supplied to the normally open cooling fan thermostat. Closing the main power switch energizes the coil of the cool down timer relay, its contacts close enabling the 30 minute time delay relay. The 30 minute time delay relay supplies 208/240VAC to the oven fan relay, these normally open contacts now close supplying 208/240VAC to the main fan motor. 208/240VAC is also supplied to the cooling fans. 208/240VAC is supplied to the primary of the control transformer, the conveyor motor and, through the air pressure switch, to the oven control. |
| **TEMPERATURE CONTROL** | Closing the main power switch supplies 208/240VAC to the primary of the control transformer. Secondary voltage, 24VAC, is supplied to the oven control. The oven control is set to desired temperature. The thermocouple will provide varying millivolts to the oven control. The oven control supplies 208/240VAC to the coil of the heater relay at intermittent intervals to maintain the desired temperature. The display on the oven control will indicate when the heater relay is energized.<br>NOTE: The display also indicates oven temperature. |
| **CONVEYOR DRIVE** | Closing the main power switch supplies 208/240VAC to the conveyor motor and to the primary of the control transformer. Secondary voltage, 24VAC, is supplied to the oven control. Setting the oven control to the desired time outputs voltage, through a reversing switch, to the conveyor motor.<br>NOTE: The conveyor system uses a Hall Effect sensor and magnet to prove operation of the conveyor motor. If the conveyor motor is not running, "**BELT JAM**" is indicated on the display. |
| **AUTOMATIC COOL DOWN** | When the oven is started, the time delay relay timing circuit is enabled, permitting the oven fans to run approximately 30 minutes after the oven is shut off, to cool the oven. The time delay relay will keep the coil of the fan relay closed, maintaining operation of the main fan and cooling fans. |

## Sequence of Operation – Impinger II Domestic 1130,1131 easyTouch, Electric 1 Phase

**S/N: 2104100102813 and above (easyTouch controls)**

### Unit Plugged Into Power

- F1 fuse energized with L1
- F2 fuse energized with L2
- Safety Contactor input energized with L1 and L2 power
- Optional Receptacle energized with L1 and L2
- Main Rocker Power Switch Input Energized with L1 and L2. Green Light ON

  Note: Green light will not be implemented with first generation units
- Cooling Fan Thermostat energized with L1
- Main Blower and Cooling Fans energized with L2

### Power Switch Turned ON

- Oven high limit capillary switch energized with L1
- Component hi-limit thermostat energized with L2
- Safety Contactor engaged/energized (If the oven high limit capillary switch and the component hi-limit thermostat are not tripped)
- If the Safety Contactor is engaged, all six heating elements are energized with L1
- If the Safety Contactor is engaged, all three SSRs are energized with L2
- Cooling Fans energized with L1
- Cooling Fan Thermostat energized with L1
- Main Blower energized with L1
- 24VDC Power Supply Energized with L1 and L2 power
- DC 4A fuse energized with 24VDC, which protects the DC components: UI and IO board
- IO Board Energized
- IO Board boots up UI
- UI initiates with Welbilt BOOT screen. UI Loads to Home Screen after small delay in time
- Optional Motor Drive Energized with 24VDC

### Press and Go Selected

- UI displays Recipes
- Recipe Selected
- Once Pre-Heating is complete, Recipe Mode is engaged
- Oven will maintain temperature set point
- Conveyor will turn on to recipe cook time speed

### Chef Mode (Manual Mode) Selected

- Enter Temperature Set Point
- Enter Conveyor belt speed (min:sec)
- In this mode, temperature and motor speed values will change automatically when on this screen, but these set points can be saved into a recipe when the save button is pressed.
- Blower Main and Cooling Fans energized with Neutral Power
- Save Button Pressed

  Select Recipe

  Change icon or color if applicable

  Press the save button

  NOTE: See Section 5 - Wiring Schematics

  for reference.

## Sequence of Operation – Impinger II Domestic 1132, 1133 easyTouch, Electric 3 Phase

**S/N: 2104100102813 and above (easyTouch controls)**

**Unit Plugged Into Power**

- F1 fuse energized with L1
- F2 fuse energized with L2
- Safety Contactor input energized with L1, L2 and L3 power
- Optional Receptacle energized with L1 and L2
- Main Rocker Power Switch Input Energized with L1 and L2. Green Light ON Note: Green light will not be implemented with first generation units
- Cooling Fan Thermostat energized with L1
- Main Blower and Cooling Fans energized with L2

**Power Switch Turned ON**

- Oven high limit capillary switch energized with L1
- SSR Switch Disconnect energized with L2
- Safety Contactor engaged/energized (If oven high limit capillary switch and the SSR Switch Disconnect are not tripped)
- If the Safety Contactor is engaged, heating elements HB and HC are energized with L1
- If the Safety Contactor is engaged, heating elements HA and HF are energized with L2
- If the Safety Contactor is engaged, heating elements HD and HE are energized with L3
- If the Safety Contactor is engaged, the three SSRs are energized with L1, L2 and L3 respectively
- Cooling Fans energized with L1
- Cooling Fan Thermostat energized with L1
- Main Blower energized with L1
- 24VDC Power Supply Energized with L1 and L2 power
- DC 4A fuse energized with 24VDC, which protects the DC components: UI and IO board
- IO Board Energized
- IO Board boots up UI
- UI initiates with Welbilt BOOT screen
- UI Loads to Home Screen after small delay in time
- Optional Motor Drive Energized with 24VDC

**Press and Go Selected**

- UI displays Recipes
- Recipe Selected
- Once Pre-Heating is complete, Recipe Mode is engaged
- Oven will maintain temperature set point
- Conveyor will turn on to recipe cook time speed

**Chef Mode (Manual Mode) Selected**

- Enter Temperature Set Point
- Enter Conveyor belt speed (min:sec)
- In this mode, temperature and motor speed values will change automatically when on this screen, but these set points can be saved into a recipe when the save button is pressed.
- Blower Main and Cooling Fans energized with Neutral Power
- Save Button Pressed

  Select Recipe

  Change icon or color if applicable

  Press the save button

  NOTE: See Section 5 - Wiring Schematics

  for reference.

## Sequence of Operation – Impinger II Domestic Advantage Digital, Electric

**(Ovens with push button controls)**

| Old Model Number | → | New Model Number | Gas Type | Voltage | Hz | Phase |
|---|---|---|---|---|---|---|
| N/A | → | 1135-xxx-U | N/A | 480 | 60 Hz | 3 |

| | |
|---|---|
| **POWER SUPPLY** | Electrical power to be supplied to the oven by a three conductor service for single phase and a four conductor service for three phase.<br>Black conductor is hot.<br>Red conductor is hot.<br>Orange conductor is hot (used for three phase only).<br>Green conductor is ground. L1 and L2 pass through the 10 amp fuses and go to the step down 480VAC transformer to 240VAC. |
| **CONTROL BOX AUTO COOL DOWN** | When the temperature in the control box reaches 120°F ± 3° (48.9°C ± 1.7°), the cooling fan thermostat will switch power to the control box cooling fans. The thermostat will interrupt power to the cooling fans when the control box temperature falls to 100°F ± 3° (37.8°C ± 1.7°). |
| **MAIN FAN CIRCUIT** | Power is permanently supplied through the 10 amp fuses, through the normally closed oven cavity hi-limit thermostat, to the normally open main power switch. Power is also supplied to the normally open cooling fan thermostat. Closing the main power switch energizes the coil of the cool down timer relay, its contacts close enabling the 20 minute time delay relay. The 20 minute time delay relay supplies 240VAC to the oven fan relay, these normally open contacts now close supplying 208/240VAC to the main fan motor. 240VAC is also supplied to the cooling fans. 240VAC is supplied to the primary of the control transformer, the conveyor motor and, through the air pressure switch, to the oven control. |
| **TEMPERATURE CONTROL** | Closing the main power switch supplies 240VAC to the primary of the control transformer. Secondary voltage, 24VAC, is supplied to the oven control. The oven control is set to desired temperature. The thermocouple will provide varying millivolts to the oven control. The oven control supplies 240VAC to the coil of the heater relay at intermittent intervals to maintain the desired temperature. The display on the oven control will indicate when the heater relay is energized.<br>NOTE: The display also indicates oven temperature. |
| **CONVEYOR DRIVE** | Closing the main power switch supplies 240VAC to the conveyor motor and to the primary of the control transformer. Secondary voltage, 24VAC, is supplied to the oven control. Setting the oven control to the desired time outputs voltage, through a reversing switch, to the conveyor motor.<br>NOTE: The conveyor system uses a Hall Effect sensor and magnet to prove. If the conveyor motor is not running, "**BELT JAM**" is indicated on the display. |
| **AUTOMATIC COOL DOWN** | When the oven is started, the time delay relay timing circuit is enabled, permitting the oven fans to run approximately 30 minutes after the oven is shut off, to cool the oven. The time delay relay will keep the coil of the fan relay closed, maintaining operation of the main fan and cooling fans. |

## Sequence of Operation – Impinger II Domestic Advantage Digital, Electric

**(Ovens with push button controls)**

| Old Model Number | → | New Model Number | Voltage | Hz | Phase |
|---|---|---|---|---|---|
| 1164-000-EA | → | 1164-xxx-E or (V) | 400/230 | 50 | 3 |
| 1164-080-EA | | | | | |

| | |
|---|---|
| **POWER SUPPLY** | Electrical power to be supplied to the oven by a four-conductor service.<br>Brown conductor is hot.<br>Black conductor is hot.<br>Red conductor is hot.<br>Green conductor is ground. |
| **MAIN FAN CIRCUIT** | Power is permanently supplied, through the 10 amp oven fuse, through the normally closed oven cavity hi-limit (opens at 695°F, 368°C), to the normally open oven fan switch. Power is also supplied to the normally open cooling fan thermostat. Closing the oven fan switch supplies line voltage to the main fan motor, the cooling fans through the EMI Filter to the primary of the control transformer and to the oven control. |
| **TEMPERATURE CONTROL** | Closing the oven fan switch supplies line voltage, through the normally open air pressure switch (closed by air pressure from the main fan) to the oven control. When the power supply is passed through the EMI Filter the load will supply line voltage to the primary of the control transformer. Secondary voltage, 24VAC, is supplied to the oven control. The oven control is set to desired temperature. The thermocouple will provide varying millivolts to the oven control. The oven control supplies line voltage to the coil of the solid state relays at intermittent intervals to maintain the desired temperature. The display on the oven control will indicate when the contactor is energized.<br>NOTE: The display also indicates oven temperature. |
| **CONVEYOR DRIVE** | Closing the oven fan switch supplies line voltage, through the normally open air pressure switch (closed by air pressure from the main fan) to the oven control. When the power supply is passed through the EMI Filter the load will supply line voltage to the primary of the control transformer. Secondary voltage, 24VAC, is supplied to the oven control. Setting the oven control to the desired time outputs voltage, through a reversing switch, to the conveyor motor.<br>NOTE: The conveyor system uses a Hall Effect sensor and magnet to prove operation of the conveyor motor. If the conveyor motor is not running, "**BELT JAM**" is indicated on the display. |

## Sequence of Operation – Impinger II International 1164 easyTouch, Electric 3 Phase

**S/N: 2104100102813 and above (easyTouch controls)**

### Unit Plugged Into Power

- F1 fuse energized with L1
- Safety Contactor input energized with L1, L2, and L3 power
- Main Rocker Power Switch Input Energized with L1 and Neutral Power. Green Light ON Note: Green light will not be implemented with first generation unit.
- Cooling Fan Thermostat energized with L1
- Main Blower and Cooling Fans energized with L2
- Electric Filter energized with Neutral Power
- All six heating elements energized with Neutral Power

### Power Switch Turned ON

- Oven high limit capillary switch energized with L1
- Switch disconnect SSR energized with Neutral Power
- Safety Contactor engaged/energized (If oven high limit capillary switch and the switch disconnect SSR are not tripped)
- If the Safety Contactor is engaged, the Electric Filter is energized with L1, L2 and L3 power
- If the Safety Contactor is engaged, all three SSRs are energized with L1, L2 and L3 respectively
- Cooling Fans energized with L1
- Cooling Fan Thermostat energized with L1
- Main Blower energized with L1
- 24VDC Power Supply Energized with L1 and Neutral Power
- DC 4A fuse energized with 24VDC, which protects the DC components: UI and IO board
- IO Board Energized
- IO Board boots up UI
- UI initiates with Welbilt BOOT screen
- UI Loads to Home Screen after small delay in time
- Optional Motor Drive Energized with 24VDC

### Press and Go Selected

- UI displays Recipes
- Recipe Selected
- Once Pre-Heating is complete, Recipe Mode is engaged
- Oven will maintain temperature set point
- Conveyor will turn on to recipe cook time speed

### Chef Mode (Manual Mode) Selected

- Enter Temperature Set Point
- Enter Conveyor belt speed (min:sec)
- In this mode, temperature and motor speed values will change automatically when on this screen, but these set points can be saved into a recipe when the save button is pressed.
- Blower Main and Cooling Fans energized with Neutral Power
- Save Button Pressed

  Select Recipe

  Change icon or color if applicable

  Press the save button

  NOTE: See Section 5 - Wiring Schematics

  for reference.

## Sequence of Operation – Impinger II International Advantage Digital, Electric

**(Ovens with push button controls)**

| Old Model Number | → | New Model Number | Gas Type | Voltage | Hz | Phase |
|---|---|---|---|---|---|---|
| N/A | → | 1134-xxx-N | N/A | 380/208 | 50 Hz | 3 |

| | |
|---|---|
| **POWER SUPPLY** | Electrical power to be supplied to the oven by a four-conductor service.<br>Brown conductor is hot.<br>Black conductor is hot.<br>Red conductor is hot.<br>Green conductor is ground. |
| **MAIN FAN CIRCUIT** | Power is permanently supplied, through the 10 amp oven fuse, through the normally closed oven cavity hi-limit (opens at 695°F, 368°C), to the normally open oven fan switch. Power is also supplied to the normally open cooling fan thermostat. Closing the oven fan switch supplies line voltage to the main fan motor, the cooling fans through the EMI Filter to the primary of the control transformer and to the oven control. |
| **TEMPERATURE CONTROL** | Closing the oven fan switch supplies line voltage, through the normally open air pressure switch (closed by air pressure from the main fan) to the oven control. When the power supply is passed through the EMI Filter the load will supply line voltage to the primary of the control transformer. Secondary voltage, 24VAC, is supplied to the oven control. The oven control is set to desired temperature. The thermocouple will provide varying millivolts to the oven control. The oven control supplies line voltage to the coil of the contactor at intermittent intervals to maintain the desired temperature. The display on the oven control will indicate when the contactor is energized.<br>NOTE: The display also indicates oven temperature. |
| **CONVEYOR DRIVE** | Closing the oven fan switch supplies line voltage, through the normally open air pressure switch (closed by air pressure from the main fan) to the oven control. When the power supply is passed through the EMI Filter the load will supply line voltage to the primary of the control transformer. Secondary voltage, 24VAC, is supplied to the oven control. Setting the oven control to the desired time outputs voltage, through a reversing switch, to the conveyor motor.<br>NOTE: The conveyor system uses a Hall Effect sensor and magnet to prove operation of the conveyor motor. If the conveyor motor is not running, "**BELT JAM**" is indicated on the display. |

## Temperature Calibration:

1. Place your temperature meter probe directly on the conveyor belt centered in the oven cavity front to back and left to right.
2. Turn oven ON; set oven temperature to 500  F (260  C). Allow 30 minutes preheat for temperatures to stabilize in oven cavity.
1. Access the Calibration Mode to enter and change the "Offset". The average temperature value on your meter while the oven is set for 500  F (260  C) and blowers running at 100% is the value that you will enter.
   **Note:** For best result, we recommend disconnecting the drive coupling to stop the conveyor from moving. Insert the temp wire into 1/4" (6mm) tubing with the tip of the wire exposed. Do not place a pan or any other object around the tip as this will change the air flow and accuracy of this reading.

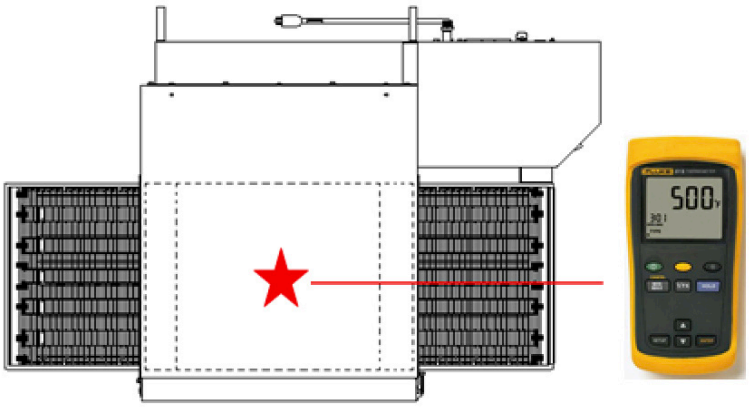



## Conveyor Speed Calibration:

1. Conveyor speed is verified by placing an object on the conveyor belt and timing the travel starting from when it first enters the chamber to when it first exits the chamber. This is also known as leading edge in to leading edge out. Pizza Pans are commonly used for this test since they can handle the heat and are usually available on site.
2. Before checking conveyor speed, allow conveyor to run for 10 minutes. If speed is off 25%, verify the control board is initialized correctly for (1100).
3. If speed is a few seconds off, bring up the Conveyor Calibration screen on the controller (Down Button while in the Calibration Mode). Increase the value to increase the speed and decrease the value to decrease the speed (.003 is approximately 1 second). Default value on the screen would be 1.000. A new setting of 1.003 would increase speed by 1 second. A new setting of 0.997 would decrease speed by 1 second.

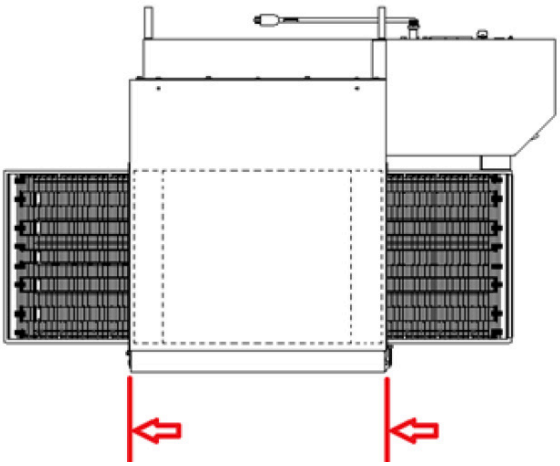

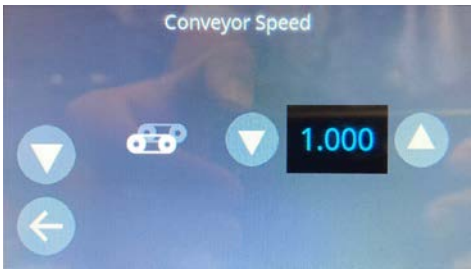

# Section 3
# Troubleshooting

## Troubleshooting Guide – Gas Ovens

**S/N: 2038616 to S/N: 2106100101444 (Ovens with push button controls)**

| Old Model Number | → | New Model Number | Gas Type | Voltage | Hz | Phase |
|---|---|---|---|---|---|---|
| 1116-080-A (or A1) | → | 1116-xxx-U | Natural | 120 VAC | 60 Hz | 1 |
| 1116-062-AR | → | | | | | |
| 1116-023-A | → | | | | | |
| 1117-080-A (or A1) | → | 1117-000z-U | LP Gas | 120 VAC | 60 Hz | 1 |
| 1117-023-A | → | 1117-xxx-U | | | | |

| Problem | Cause | Correction |
|---|---|---|
| Oven fan will not run | Incoming power supply | Check circuit breakers, reset if required. Check power plug to be sure it is firmly in receptacle. Measure incoming power, call power co. if needed. |
| | Fuse, 10 Amp | Check, replace if necessary. |
| | Fuse Holder | Check, replace if necessary. |
| | Hi-limit thermostat, control box for (000-A units) | Check for voltage on both sides of switch. Terminals are normally closed. If open, reset and test oven for proper operation. If thermostat will not hold, and control box temperature is not exceeding 140°F (60°C), replace thermostat. |
| | Switch, main power | Check continuity between switch terminals. Replace switch as needed. |
| | Main fan motor | Check for 120VAC at motor. If no voltage is present, trace wiring back to main power switch.<br>WITH POWER OFF: Check for opens, shorts or grounds. Turn fan blade to check for locked rotor. |
| | Capacitor | Check for shorts or grounds. (15 mfd)<br>WARNING: Capacitor has a stored charge, discharge before testing. |
| No control box cooling | Incoming power | Check circuit breakers, reset if required. Check power plug to be sure it is firmly in receptacle. Measure incoming power, call power co. if needed. |
| | Switch, main power | Check continuity between switch terminals. Replace switch as needed |
| | Cooling fan (s) | Check for 120VAC at cooling fan. If no voltage is present, trace wiring back to power switch. If voltage is present, and motor does not run, check for opens, shorts or grounds.<br>WITH POWER OFF: Check for locked rotor and replace as needed. |
| No automatic control box cooling | Incoming power supply | Check circuit breakers, reset if needed. Call power company if needed. |
| | Cooling fan thermostat | Check the cooling fan thermostat (thermostat closes at 120°F and opens at 100°F). With the cooling fan thermostat preheated, check for continuity. If switch is open, replace. |
| | Cooling fan(s) | Supply voltage should now be at these motors. If voltage is present, check motor for opens, shorts or grounds. WITH POWER OFF: Check for locked rotor and replace as needed. |
| Oven will not heat | Gas supply | Check for adequate gas supply to oven. |
| | Manual gas shut off valve | Check to see that the manual gas shut off valve is open. Also check flexible gas line connection for any damage. |
| | Main oven fan | Check if main oven fan is operating. If not, refer to "Oven fan will not run". |
| | Centrifugal switch of main fan motor | Check for 120VAC at wire #5 (input to centrifugal switch, located at 6-pin connector in raceway near the main fan motor) to neutral. If no voltage is present, trace wiring back to the main power switch. If voltage is present, check for 120VAC at wire #22 (output of centrifugal switch) to neutral. If no voltage is present at #22, and the motor is running, replace the main fan motor. |

| Problem | Cause | Correction |
|---|---|---|
| Oven will not heat, ctd. | Hi-limit thermostat, oven cavity | Terminals are normally closed. If open, reset thermostat and retest. If thermostat will not hold for maximum oven temperature, and oven is not exceeding temperature setting, check for proper location of capillary bulb in its spring holder. If the capillary checks okay, replace the hi-limit thermostat. |
| | Burner blower motor | Check for 120VAC supplied to burner blower motor at wire #7 to neutral. If no voltage is present, trace wiring back to the main power switch. If voltage is present, and the motor is not running, check for opens, shorts or grounds. WITH POWER OFF: Turn motor to check for locked rotor. |
| | Burner transformer | Check for 120VAC supplied to the primary of the burner transformer. If no voltage is present, trace wiring back to the oven cavity hi-limit thermostat. If voltage is present, check for 24VAC at transformer secondary. If there is primary voltage but no secondary voltage, replace burner transformer. |
| | Centrifugal switch of burner blower motor | Check for 24VAC at motor connector, wire #13 to neutral. If voltage is not present, trace wiring back to transformer. If voltage is present, check for voltage at wire #14 to neutral. If no voltage is present at wire #14, and motor is running, replace burner blower motor. |
| | Ignition control | Check for 24VAC at ignition control terminals marked "24V", if no voltage is present, trace wiring back to centrifugal switch. Check for 120VAC to ignition control at terminal "L1" to neutral. If no voltage is present, trace wiring back to main power switch. When 24VAC is supplied to the ignition control, the ignition control switches 120VAC to the hot surface igniter. If 24VAC and 120VAC are supplied to ignition control, but there is no voltage at the hot surface igniter, replace the ignition control. |
| Flame will not stay lit | Hot surface igniter | If 120VAC is present at hot surface igniter terminals, visually check to see that the igniter is heating<br>(Igniter may be viewed through the port in the end of burner tube). The igniter should glow bright red. If the igniter does not heat, replace the hot surface igniter. |
| | Ignition control | After 45 seconds of hot surface igniter pre-heat, the ignition control will switch 24VAC to the gas control valves. Check for 24VAC output from ignition control across terminals marked "valve" and "valve gnd". If no voltage is present, replace ignition control. |
| | Gas control valves | When 24VAC is supplied to the gas control valves, the valve should open. Check for gas pressure at the manifold tap located just before the burner. If there is no pressure, check the incoming gas supply to be sure all manual valves are open and flexible gas hose is properly connected. If gas is present, and the gas control valve is energized, but there is no gas pressure at the burner manifold, replace the gas valve. |
| | Hot surface igniter | Six seconds after the gas valve opens, ignition must occur. If flame is not detected, the ignition control will shut off and lock out. To reset the ignition control, turn off the power switch for 45 seconds, then turn the switch on to re-try ignition. The ignition control requires a minimum of 0.8 DC microamps to prove flame. To check flame sensing operation, connect a digital multimeter (capable of measuring DC microamps) between the "ground" terminal on ignition control and the ground lead.<br>NOTE: This is a current measurement, and the meter must be connected in series.<br>If these readings are not achieved, replace hot surface igniter. NOTE: The DC microamp test must be conducted with the oven in low flame (bypass) operation. Set the temperature control to the lowest setting. |
| | Power supply | If there is sufficient microamp current, but the flame will not stay lit, check for proper polarity of the 120VAC power supply. |
| | Ignition control | If there is sufficient microamp current, and the 120VAC polarity is correct, but the flame will not stay lit, replace the ignition control. NOTE: Check for proper ground connection on ignition control. |
| | NOTE: Flame should be on at this time | |

| Problem | Cause | Correction |
|---|---|---|
| Low flame is on, but no main flame | Control transformer | Check for 120VAC supply to the primary of the control transformer. If no voltage is present, trace wiring back to the main power switch. If voltage is present, check for 24VAC at the transformer secondary. If there is primary voltage, but no secondary voltage, replace the control transformer. |
| | Oven control | Check for 24VAC supply to control. If no voltage is present, trace wiring back to control transformer. If 24VAC is present, check for a read-out on the display. If there is 24VAC supplied, but there is no read-out on the control display, replace the oven control.<br>If there is a read-out on the control, set the control to maximum temperature (see installation operations manual for temperature adjustment). With the control set at maximum temperature, check for 120VAC at the temperature regulation valve. If there is voltage at the temperature regulation valve, proceed to "Temperature regulation valve" for next check. If there is no voltage at the temperature regulation valve, trace wiring back to the oven control. If there is no voltage output at the oven control, check the read-out on the control. If the control reads "PROBE FAIL", this indicates that the thermocouple has failed or become disconnected from the oven control. |
| | Thermocouple (see QR chart on Page 66) | Check to be sure that the thermocouple is securely connected to the oven control. If the thermocouple is connected to the oven control, and the control indicates "PROBE FAIL", disconnect the thermocouple from the oven control and measure the resistance of the thermocouple. The thermocouple should read approx. 11Ω. If these readings are not achieved, replace the thermocouple. If these readings are correct, proceed. |
| | Temperature regulation valve | Check for 120VAC supplied to temperature regulation valve. If voltage is present, listen for valve to open and close. Also check for opens or shorts in the operating coil. Check for proper gas pressure at the oven manifold. Replace temperature regulation valve as needed. |
| Intermittent heating | Thermal/overload of main fan and burner blower motor | The main fan motor and burner blower motor are equipped with internal thermal protection and will cease to operate if overheating occurs. As the motors overheat and then cool, this will cause the heating system to cycle on and off intermittently. Improper ventilation or lack of preventive maintenance may cause this problem. Also, most of the problems listed under "Oven will not heat" can cause intermittent failure. |
| Conveyor(s) will not run | Power supply | Check for incoming voltage at line 1 to neutral. There should be a reading of 120VAC. If not present, check circuit breakers. |
| | Fuse, 10 Amp | Check, replace if necessary. |
| | Fuse holder | Check, replace if necessary. |
| | Hi-limit thermostat, control box (000-A Units ONLY) | Check for voltage on both sides of switch. Terminals are normally closed. If open, reset and test oven for proper operation. If thermostat will not hold, and control box temperature is not exceeding 140°F (60°C), replace thermostat. |
| | Power switch | Check continuity between switch terminals. Replace switch as needed. |
| | Control transformer | Check for 120 VAC supply to the primary of the control transformer. If no voltage is present, trace wiring back to the oven power relay. If voltage is present, check for 24 VAC at the transformer secondary. If there is primary voltage but no secondary voltage, replace control transformer. |

| Problem | Cause | Correction |
|---|---|---|
| Conveyor(s) will not run, ctd. | Conveyor motor | Check for 120 VAC supply to the conveyor motor at wire #10 to neutral. If no voltage is present, trace wiring back to the primary of the control transformer. If voltage is present and the motor will not run, check the motor windings for opens or shorts.<br>WITH POWER OFF: Check the motor windings as follows:<br>S/N: 2052462 and below (Blue Dot ) — Grey to black - 38Ω approx.; Grey to blue - 38Ω approx.; Blue to black - 75Ω approx.<br>S/N: 2052463 and above (Green Dot ) — Grey to black - 89Ω approx.; Grey to blue - 89Ω approx.; Blue to black - 178Ω approx.<br><br>If any of the above fails, replace conveyor motor. |
| | Capacitor, conveyor motor | Check for shorts or grounds and test the capacitor. Replace capacitor as needed. **WARNING**: Capacitor has a stored charge, discharge before testing.<br>(S/N: 2052462 & below blue dot = 4.5mfd)<br>(S/N: 2052462 & above green dot = 3.5mfd) |
| | Switch, conveyor reversing | Check continuity between switch terminals. Replace switch as needed. |
| | Oven control | If there is 120VAC supplied to the motor, and the motor, capacitor, and reversing switch check good, replace the oven control. |
| Conveyor motor runs, but there is no speed display | NOTE: Display will indicate "Belt Jam" | |
| | Oven control | Check for output voltage from oven control to Hall Effect sensor (sensor is located in conveyor motor). Measure voltage at the motor connector, red wire and yellow wire. Voltage should be approx. 10VDC. If no voltage is present, trace wiring back to oven control. If there is no voltage present at the oven control, replace the oven control. |
| | Conveyor motor | If there is voltage supplied to the Hall Effect sensor, check for a frequency output from the Hall Effect sensor. Measure frequency across the yellow and white wires at the motor connector. Frequency reading should be approx. 25 – 100 Hz. If these readings are not achieved, replace conveyor motor. If the readings are achieved, proceed. |
| | Oven control | If the Hall Effect sensor readings are correct, but there is no speed indicated on the display, replace the oven control. |

## Troubleshooting Guide – Impinger II Domestic 1116,1117 easyTouch, Gas

**S/N: 2106100101445 and above (easyTouch controls)**

| Problem | Cause | Correction |
|---|---|---|
| UI blank | Oven not plugged in, panel breaker tripped | Check panel breaker and plug |
| | | Ensure input voltage is within specifications |
| | Faulty fuses/fuse holder | Replace fuses on back panel |
| | | Inspect fuse holders for cracks and replace if needed |
| | Wiring Issue | Inspect UI cable for damage |
| | | Unplug and plug the UI cable back in |
| | | Replace UI cable |
| | Faulty UI | Check for cracks or damaged screen |
| | | Check cable connection to UI for fit |
| | | Install new UI with correct software revision |
| | Faulty power switch | Check continuity through switch. Check for incoming 120VAC on terminals. Replace if needed. |
| | Faulty DC power supply | Check for steady 120VAC input between #59 (N) and #74(L) |
| | | Check for steady 24VDC output between (+) and (-) wires |
| | | Check for physical damage on the circuit board. Replace if needed |
| | Faulty IO board | Check for 24VDC input on (-V) and (+V) wires |
| | | Check cable connection to UI for fit |
| | | Inspect IO board for damage and replace if needed |
| UI screen locked up, frozen, nonresponsive to touch | Software issue | Turn OFF the unit using the power switch, turn the unit back ON after 30 seconds. |
| | Damaged or cracked touchscreen | Install new UI with correct software revision |
| Unable to read USB | Faulty flash drive | Retry with known good quality flash drive |
| | Incorrect USB format | Make sure flash drive is formatted using FAT32 |
| | USB cable disconnected | Check if USB connector is seated properly |
| | Faulty UI | Check for cracks or damaged screen |
| | | Check cable connection to UI for fit |
| | | Install new UI with correct software revision |
| Unable to load USB files | Faulty flash drive | Retry with known good quality flash drive |
| | Files on flash drive incorrect or corrupt | Delete all files on flash drive and reload updated files |
| | Faulty USB socket | Inspect USB socket for damage and replace if needed |

| Problem | Cause | Correction |
|---|---|---|
| Oven fan will not run | Incoming power supply | Check circuit breakers, reset if required. Check power plug to be sure it is firmly in receptacle. Measure incoming power, call power co. if needed. |
| | Fuse, 10 Amp and/or Fuse Holder | Check, replace if necessary. |
| | Switch, main power | Check continuity between switch terminals. Replace switch as needed. |
| | Main fan motor | Check for 120VAC at motor. If no voltage is present, trace wiring back to main power switch.<br>WITH POWER OFF: Check for opens, shorts or grounds. Turn fan blade to check for locked rotor. |
| | Capacitor | Check for shorts or grounds. (15 mfd)<br>**WARNING**: Capacitor has a stored charge, discharge before testing. |
| No control box cooling | Incoming power | Check circuit breakers, reset if required. Check power plug to be sure it is firmly in receptacle. Measure incoming power, call power co. if needed. |
| | Switch, main power | Check continuity between switch terminals. Replace switch as needed |
| | Cooling fan (s) | Check for 120VAC at cooling fan. If no voltage is present, trace wiring back to power switch. If voltage is present, and motor does not run, check for opens, shorts or grounds.<br>WITH POWER OFF: Check for locked rotor and replace as needed. |
| No automatic control box cooling | Incoming power supply | Check circuit breakers, reset if needed. Call power company if needed. |
| | Cooling fan thermostat | Check the cooling fan thermostat (thermostat closes at 120°F and opens at 100°F). With the cooling fan thermostat preheated, check for continuity. If switch is open, replace. |
| | Cooling fan(s) | Supply voltage should now be at these motors. If voltage is present, check motor for opens, shorts or grounds. WITH POWER OFF: Check for locked rotor and replace as needed. |

| Problem | Cause | Correction |
|---|---|---|
| Conveyor does not move | Temperature set point has not been reached | If using the Press & Go menu recipes, wait until UI displays the "Ready" status message |
| | Coupling loose or disconnected | Tighten set screw on coupling |
| | Belt link loose or disconnected | Tighten belt, if needed replace belt link |
| | Conveyor has stretched from use | Remove adequate number of links to tighten the belt |
| | Incorrectly installed | Verify conveyor belt orientation. Shaft should be inserted into motor coupling |
| | Software issue | Turn OFF the unit using the power switch, turn the unit back ON after 30 seconds. |
| | | Go to Manual Mode and change belt speed |
| | Failed or failing conveyor stepper motor | Check for resistance on red and blue and again at yellow and white. Resistance should be .65Ω (±10%). |
| | | Check for opens, shorts or grounds |
| | | Change conveyor belt direction in the UI's Settings Menu |
| | Faulty IO board and/or built-in motor drive | Check for 24VDC input on (-V) and (+V) wires |
| | | Check wires are connected properly |
| | | Inspect IO board for damage and replace if needed |
| | Faulty stepper drive (STR8) (See chart on page 70) | Check LEDs to identify alarm codes on stepper drive. Faults disable the motor and can be cleared by cycling power to the drive. |
| | | Try the built-in self test. Anytime switch 8 is moved to the ON position, the drive will automatically rotate the motor back and forth, two turns in each direction. This feature can be used to confirm the motor is correctly wired, selected and operational. |
| | | Check for 24VDC input on (-V) and (+V) wires |
| | | Check wires are connected properly |
| | | Inspect stepper motor drive for damage and replace if needed |

| Problem | Cause | Correction |
|---|---|---|
| Unable to reach or maintain temperature | Gas supply | Check for adequate gas supply to oven. (Natural Gas = 3.5" WC) (LP Gas = 10" WC ) |
| | Manual gas shut off valve | Check to see that the manual gas shut off valve is open. Also check flexible gas line connection for any damage. |
| | Main fan | If not operating, refer to "Oven fan will not run". |
| | Centrifugal switch of main fan motor | Check for 120VAC at wire #19 (input to centrifugal switch, located at 6-pin connector in raceway near the main fan motor) to neutral. If no voltage is present, trace wiring back to the main power switch. If voltage is present, check for 120VAC at wire #8 (output of centrifugal switch) to neutral. If no voltage is present at #8, and the motor is running, replace the main fan motor. |
| | Cavity hi-limit | Terminals are normally closed. If open, reset thermostat and retest. If thermostat will not hold for maximum oven temperature, and oven is not exceeding temperature setting, check for proper location of capillary bulb in its spring holder. If the capillary checks okay, replace the hi-limit thermostat. |
| | Transformer | Check for 120VAC at the transformer on wires 5, 6 to wire 90 on the input terminals. If 120VAC is present verify 24VAC is supplied to the output terminals on wire 89 and wire 91. Replace if necessary. |
| | Ignition control | Check for 24VAC at ignition control terminals marked "24V", if no voltage is present, trace wiring back to centrifugal switch. Check for 120VAC to ignition control at terminal "L1" to neutral. If no voltage is present, trace wiring back to main power switch. When 24VAC is supplied to the ignition control, the ignition control switches 120VAC to the hot surface igniter. If 24VAC and 120VAC are supplied to ignition control, but there is no voltage at the hot surface igniter, replace the ignition control. |
| | Hot surface igniter | If 120VAC is present at hot surface igniter terminals, visually check to see that the igniter is heating (Igniter may be viewed through the port in the end of burner tube). The igniter should glow bright red. If the igniter does not heat, replace the hot surface igniter. |
| | Gas control valves | When 24VAC is supplied to the gas control valves, the valve should open. Check for gas pressure at the manifold tap located just before the burner. If there is no pressure, check the incoming gas supply to be sure all manual valves are open and flexible gas hose is properly connected. If gas is present, and the gas control valve is energized, but there is no gas pressure at the burner manifold, replace the gas valve. |

| Problem | Cause | Correction |
|---|---|---|
| Flame will not stay lit | Hot surface igniter | Six seconds after the gas valve opens, ignition must occur. If flame is not detected, the ignition control will shut off and lock out. To reset the ignition control, turn off the power switch for 45 seconds, then turn the switch on to re-try ignition. The ignition control requires a minimum of 0.8 DC microamps to prove flame. To check flame sensing operation, connect a digital multimeter (capable of measuring DC microamps) between the "ground" terminal on ignition control and the ground lead. NOTE: This is a current measurement, and the meter must be connected in series.<br>If these readings are not achieved, replace hot surface igniter. NOTE: The DC microamp test must be conducted with the oven in low flame (bypass) operation. Set the temperature control to the lowest setting. |
| | Power supply | If there is sufficient microamp current, but the flame will not stay lit, check for proper polarity of the 120VAC power supply. |
| | Ignition control | If there is sufficient microamp current, and the 120VAC polarity is correct, but the flame will not stay lit, replace the ignition control. NOTE: Check for proper ground connection on ignition control. |
| | **NOTE**: Flame should be on at this time | |
| Intermittent heating | Thermal/overload of main fan and burner blower motor | The main fan motor and burner blower motor are equipped with internal thermal protection and will cease to operate if overheating occurs. As the motors overheat and then cool, this will cause the heating system to cycle on and off intermittently. Improper ventilation or lack of preventive maintenance may cause this problem. Also, most of the problems listed under "Oven will not heat" can cause intermittent failure. |

| Problem | Cause | Correction |
|---|---|---|
| Low flame is on, but no main flame | PSU1 (D.C. Power Supply) | Check for 120VAC supply to the primary of the PSU1. If no voltage is present, trace wiring back to the main power switch. If voltage is present, check for 24VDC at the PSU1 secondary. If there is primary voltage, but no secondary voltage, replace the PSU1. |
| | Oven control | Check for 24VDC supply to control. If no voltage is present, trace wiring back to PSU1. If 24VDC is present, check for a read-out on the display. If there is 24VDC supplied, but there is no read-out on the control display, replace the oven control.<br>If there is a read-out on the control, set the control to maximum temperature. With the control set at maximum temperature, check for 120VAC at the temperature regulation valve. If there is voltage at the temperature regulation valve, proceed to "Temperature regulation valve" for next check. If there is no voltage at the temperature regulation valve, trace wiring back to the oven control. If there is no voltage output at the oven control, check the read-out on the control. If the control reads "ERR_ THERMOCPL" , this indicates that the thermocouple has failed or become disconnected from the oven control. |
| | Thermocouple<br>(see QR chart on page 66) | Check to be sure that the thermocouple is securely connected to the oven control. If the thermocouple is connected to the oven control, and the control indicates "PROBE FAIL", disconnect the thermocouple from the oven control and measure the resistance of the thermocouple.<br>Resistance: 7Ω - 14Ω<br>If these readings are not achieved, replace the thermocouple. If these readings are correct, proceed. |
| | Temperature regulation valve | Check for 120VAC supplied to temperature regulation valve. If voltage is present, listen for valve to open and close. Also check for opens or shorts in the operating coil. Check for proper gas pressure at the oven manifold. Replace temperature regulation valve as needed. |

NOTE: Setting Password is 6-7-8-5-3-5

NOTE: Service Password is 4-5-8-7-5-6

## Troubleshooting Guide – Gas Ovens

**(Ovens with push button controls)**

| Old Model Number | → | New Model Number | Gas Type | Voltage | Hz | Phase |
|---|---|---|---|---|---|---|
| 1154-000-EA | → | 1154-xxx-E | Natural | 230 VAC | 50 Hz | 1 |
| 1154-080-EA | → | | | | | |
| 1154-V80-EA | → | 1157-xxx-N | | 220 VAC | 60 Hz | |
| 1155-000-EA | → | 1155-xxx-E | LP Gas | 230 VAC | 50 Hz | |
| 1155-080-EA | | | | | | |
| 1155-V80-EA | → | 1158-xxx-N | | 220 VAC | 60 Hz | |

| Problem | Cause | Correction |
|---|---|---|
| Oven fan will not run | Incoming power supply | Check circuit breakers, reset if required. Check power plug to be sure it is firmly in receptacle. Measure incoming power, call power co. if needed. |
| | Control Box Limit (000-A Units Only) | Check to see if it is open, replace if necessary. |
| | Fuse, 10 amp | Check, replace if necessary. |
| | Fuse holder | Check, replace if necessary. |
| | Switch, main fan | Check and/or replace. |
| | Motor, main fan | With power off, check continuity between switch terminals. Check for opens, shorts or grounds. With power off, turn fan blade to check for locked rotor. Replace as needed. |
| | Capacitor | Check for shorts or grounds. 7.5 mfd<br>**WARNING**: Capacitor has a stored charge, discharge before testing. |
| No control box cooling | Incoming power supply | Check breaker, reset if required. Check power plug to be sure it is firmly in receptacle. Measure incoming power, call power company if needed. |
| | Switch, main fan | With power off, check continuity between switch terminals. Replace as needed. |
| | Cooling fans | Line voltage should now be at the cooling fan. If voltage is present, check motor for opens, shorts or grounds. With power off, check for locked rotor. |
| | Fuse and Fuse Holder | Check continuity, check for opens and shorts. Replace if necessary. |
| No automatic control box cooling | Incoming power supply | Check breaker, reset if required. Check power plug to be sure it is firmly in receptacle. Measure incoming power, call power company if needed. |
| | Cooling fan thermostat | Check the cooling fan thermostat (thermostat closes at 120°F and opens at 100°F). With the cooling fan thermostat pre-heated, check for continuity. If thermostat is open, replace cooling fan thermostat. |
| | Cooling fan | Line voltage should now be at the cooling fan. If voltage is present, check motor for opens, shorts or grounds. With power off, check for locked rotor. |
| | Fuse, 10 amp | Check, replace if necessary. |
| | Fuse holder | Check, replace if necessary. |

| Problem | Cause | Correction |
|---|---|---|
| Oven will not heat | Gas supply | Check for adequate gas supply and be sure that the manual gas shut |
| | Main fan | off valve is open. Also check flexible gas line connection. |
| | Air pressure switch | If not operating, refer to "Oven fan will not run". |
| | Oven cavity hi-limit thermostat | Check air switch terminals for supply voltage to terminals C and NO. If voltage is present on one side only, check for air tube blockage or misalignment. If these are okay, adjust air pressure switch or replace if necessary. |
| | Ignition control Honeywell (See Section 4 for Techrite charts) | Terminals are normally closed, opens at 350°C (660°F). If open, reset and test oven for proper operation. If thermostat will not hold for maximum oven temperature, and oven is not exceeding control setting, check for proper location of capillary bulb in its spring holder. If above checks are okay, replace hi-limit thermostat. |
| | Burner blower motor | Check for supply voltage to motor. WITH POWER OFF: Turn blower wheel to check for locked rotor. If supply voltage is present at motor connecting plug terminal 2 and Neutral, and motor does not run, replace burner blower motor. |
| | Air pressure switch (burner blower) | Check for proper supply voltage switching from "NC" to "NO" on ignition control. Check for air pressure switch adjustment, air tube blockage or misalignment. If these adjustments fail, replace air pressure switch. |
| | Ignition control | A pre-purge time of 30 to 60 seconds occurs after burner blower motor starts. Check for high voltage spark output from the ignition control. If there is no high voltage spark output, check reset button for ignition control. If there is still no high voltage output, replace the ignition control. |
| | Igniter/sensor assembly | Check this assembly for visible damage. Replace as needed. If there is no visible damage, check for voltage supply to igniter/sensor assembly. If there is voltage supplied to the igniter/sensor, but there is no spark, replace igniter/sensor assembly. |
| | Gas valve | Gas valve should open as the ignition control generates the high voltage spark. Place manometer on the pressure tap fitting (located in the gas piping just prior to the burner manifold) and check for gas pressure. If valve does not open, check reset button on ignition control, and all connections for tightness. If there is still no gas pressure, remove the ignition control from the gas valve. Check the coils of the gas valve for opens or shorts. Readings should be as follows, V1 – 2.9K ohms approx., V2 – 1.3K ohms approx. If these readings are not achieved, replace gas valve. If these readings are achieved, replace ignition control. |
| Flame will not stay on | Flame sensor | To check for flame sensor operation, connect a digital multimeter (capable of measuring DC microamps) between the flame sensor wire and the flame sensor connection on the ignition control. Sensor current is to be 0.9 microamps, minimum. If these readings are not achieved, replace igniter/ sensor assembly. Also check for any type of damage to flame sensor wire and connections.<br>NOTE: The DC microamp test must be conducted with the oven in low flame (bypass) operation. |
| | Power supply | Set the temperature to the lowest temperature setting. If there is sufficient microamp current, but the flame will not stay lit, check for proper polarity of the power supply. |

| Problem | Cause | Correction |
|---|---|---|
| | NOTE: Flame should be on at this time | |
| Low flame is on, but no main flame | Control transformer | Check for supply voltage to the primary of control transformer. If no voltage is present, trace wiring back to oven EMI filter. If voltage is present, check for voltage at the EMI filter. If there is no primary voltage, replace EMI Filter. |
| | Thermocouple<br>(see QR chart on page 66) | Check to be sure that the thermocouple is securely connected to the oven control. If the thermocouple is connected to the oven control, and the control indicates "PROBE FAIL", disconnect the thermocouple from the oven control and measure the resistance of the thermocouple. Resistance: 7Ω - 14Ω<br>If these readings are not achieved, replace the thermocouple. If these readings are correct, proceed. |
| | Temperature regulation valve | Check for 230VAC supplied to temperature regulation valve. If voltage is present, listen for valve to open and close. Also check for opens or shorts in the operating coil. Check for proper gas pressure at the oven manifold. Replace temperature regulation valve as needed. |
| Conveyor motor not turning | Conveyor motor | Check for supply voltage to the conveyor motor at wire #6 to neutral. If no voltage is present, trace wiring back to the oven fan switch. If voltage is present, but the motor will not run, check the motor windings for opens or shorts. If any of the above fail, replace the conveyor motor.<br>S/N: 2052462 and below (Red Dot) — Grey to Black 240Ω approx.; Grey to Brown 240Ω approx.; Brown to Black 480Ω approx.<br>S/N: 2052463 and above (Brown Dot) — Grey to Black 360Ω approx.; Grey to Brown 360Ω approx.; Brown to Black 720Ω approx. |
| | Capacitor, conveyor motor | Check for shorts or grounds. Replace capacitor as needed.<br>**WARNING**: Capacitor has a stored charge, discharge before testing.<br><br>S/N: 2052462 and below 1.2 mfd (Red Dot)<br>S/N: 2052463 and above 1.0mfd (Brown Dot) |
| | Switch, conveyor reversing | Check continuity between switch terminals. Replace switch as needed. |
| | Oven control | If there is voltage supplied to the motor, and the motor, capacitor and reversing switch check good, replace the oven control. |
| Conveyor motor runs, but there is no speed display | NOTE: Display will indicate "BELT JAM" | |
| | Oven control | Check for output voltage from oven control to Hall Effect sensor (sensor is located in the conveyor motor). Measure voltage at the motor connector, red wire and yellow wire. Voltage should be approx. 10VDC. If no voltage is present, trace wiring back to oven control. If there is no voltage output at the oven control, replace oven control. |
| | Conveyor motor | If there is voltage supplied to the Hall Effect sensor, check for a frequency output from the Hall Effect sensor. Measure frequency across the yellow and white wires in the motor connector. Frequency reading should be approx. 25-100 Hz. If these readings are not achieved, replace conveyor motor. If the readings are achieved, proceed. |
| | Oven control | If the Hall Effect sensor readings are correct, but there is no speed indicated on the display, replace the oven control. |

## Troubleshooting Guide – Impinger II International 1154,1155,1157,1158 easyTouch, Gas

**S/N: 2106100101445 and above (easyTouch controls)**

| Problem | Cause | Correction |
|---|---|---|
| UI blank | Oven not plugged in, panel breaker tripped | Check panel breaker and plug |
| | | Ensure input voltage is within specifications |
| | Faulty fuses/fuse holder | Replace fuses on back panel |
| | | Inspect fuse holders for cracks and replace if needed |
| | Wiring Issue | Inspect UI cable for damage |
| | | Unplug and plug the UI cable back in |
| | | Replace UI cable |
| | Faulty UI | Check for cracks or damaged screen |
| | | Check cable connection to UI for fit |
| | | Install new UI with correct software revision |
| | Faulty power switch | Check continuity through switch. Check for incoming 120VAC on terminals. Replace if needed. |
| | Faulty DC power supply | Check for steady 120VAC input between #59 (N) and #74(L) |
| | | Check for steady 24VDC output between (+) and (-) wires |
| | | Check for physical damage on the circuit board. Replace if needed |
| | Faulty IO board | Check for 24VDC input on (-V) and (+V) wires |
| | | Check cable connection to UI for fit |
| UI screen locked up, frozen, nonresponsive to touch | Software issue | Turn OFF the unit using the power switch, turn the unit back ON after 30 seconds. |
| | Damaged or cracked touchscreen | Install new UI with correct software revision |
| Unable to read USB | Faulty flash drive | Retry with known good quality flash drive |
| | Incorrect USB format | Make sure flash drive is formatted using FAT32 |
| | USB cable disconnected | Check if USB connector is seated properly |
| | Faulty UI | Check for cracks or damaged screen |
| | | Check cable connection to UI for fit |
| | | Install new UI with correct software revision |
| Unable to load USB files | Faulty flash drive | Retry with known good quality flash drive |
| | Files on flash drive incorrect or corrupt | Delete all files on flash drive and reload updated files |
| | Faulty USB socket | Inspect USB socket for damage and replace if needed |

| Problem | Cause | Correction |
|---|---|---|
| Oven fan will not run | Incoming power supply | Check circuit breakers, reset if required. Check power plug to be sure it is firmly in receptacle. Measure incoming power, call power co. if needed. |
| | Fuse, 10 Amp and/or Fuse Holder | Check, replace if necessary. |
| | Latching contactor | Verified the K1 contactor is closed and power is being supplied to the motor on wires 39 and 28. If the coil of the K1 contactor does not close an alarm will sound. |
| | Push Button Reset (Alarm) | Verify that the alarm reset has been pushed and is engaged if not check continuity between wires numbers 71,72 and 74,75 |
| | Fuse, 10 Amp and/or Fuse Holder | Check, replace if necessary. |
| | Switch, main power | Check continuity between switch terminals. Turn off then on after 30 sec. Replace switch as needed. |
| | Main fan motor | Check for 120VAC at motor. If no voltage is present, trace wiring back to main power switch.<br>WITH POWER OFF: Check for opens, shorts or grounds. Turn fan blade to check for locked rotor. |
| | Capacitor | Check for shorts or grounds. (15 mfd)<br>WARNING: Capacitor has a stored charge, discharge before testing. |
| No control box cooling & No automatic control box cooling | Incoming power | Check circuit breakers, reset if required. Check power plug to be sure it is firmly in receptacle. Measure incoming power, call power co. if needed. |
| | Switch, main power | Check continuity between switch terminals. Replace switch as needed |
| | Cooling fan(s) | Check for 120VAC at cooling fan. If no voltage is present, trace wiring back to power switch. If voltage is present, and motor does not run, check for opens, shorts or grounds.<br>WITH POWER OFF: Check for locked rotor and replace as needed. |
| | Latching contactor | Verified the K1 contactor is closed and power is being supplied to the motor on wires 39 and 28. If the coil of the K1 contactor does not close an alarm will sound. |
| | Push Button Reset (Alarm) | Verify that the alarm reset has been pushed and is engaged if not check continuity between wires numbers 71,72 and 74,75 |
| | Fuse, 10 Amp and/or Fuse Holder | Check, replace if necessary. |

| Problem | Cause | Correction |
|---|---|---|
| Unable to reach or maintain temperature | Gas supply | Check for adequate gas supply to oven. (Natural Gas = 3.5" WC) (LP Gas = 10" WC ) |
| | Manual gas shut off valve | Check to see that the manual gas shut off valve is open. Also check flexible gas line connection for any damage. |
| | Main fan | If not operating, refer to "Oven fan will not run". |
| | Air pressure switch (main blower) | Check for proper supply voltage switching from "NC" to "NO" on ignition control. Check for continuity on wires 23 and 22. Check for air pressure switch adjustment, air tube blockage or misalignment. If these adjustments fail, replace air pressure switch. |
| | Burner blower motor | Check for supply voltage to motor. WITH POWER OFF: Turn blower wheel to check for locked rotor. If supply voltage is present at motor connecting wires 38 and 17, and motor does not run, replace burner blower motor. |
| | Air pressure switch (burner blower) | Check for proper supply voltage switching from "NC" to "NO" on ignition control. Check for continuity on wires 18 and 16. Check for air pressure switch adjustment, air tube blockage or misalignment. If these adjustments fail, replace air pressure switch. |
| | Ignition control (See Section 4 for Techrite charts) | Check for 120VAC at ignition control terminals marked "J4 ( N, A)", if no voltage is present, trace wiring back to air pressure switch. A pre-purge time of 30 to 60 seconds occurs after burner blower motor starts. Check for high voltage spark output from the ignition control. If there is no high voltage spark output, check reset button for ignition control. If there is still no high voltage output, replace the ignition control. |
| | Igniter/sensor assembly | Check this assembly for visible damage. Replace as needed. If there is no visible damage, check for voltage supply to igniter/sensor assembly. If there is voltage supplied to the igniter/sensor, but there is no spark, replace igniter/sensor assembly. |
| | Gas control valves | When 24VAC is supplied to the gas control valves, the valve should open. Check for gas pressure at the manifold tap located just before the burner. If there is no pressure, check the incoming gas supply to be sure all manual valves are open and flexible gas hose is properly connected. If gas is present, and the gas control valve is energized, but there is no gas pressure at the burner manifold, replace the gas valve. |

| Problem | Cause | Correction |
|---|---|---|
| Flame will not stay lit | Flame sensor | To check for flame sensor operation, connect a digital multimeter (capable of measuring DC microamps) between the flame sensor wire and the flame sensor connection on the ignition control. Sensor current is to be 0.9 microamps, minimum. If these readings are not achieved, replace igniter/ sensor assembly. Also check for any type of damage to flame sensor wire and connections.<br>NOTE: The DC microamp test must be conducted with the oven in low flame (bypass) operation. |
| | Power supply | If there is sufficient microamp current, but the flame will not stay lit, check for proper polarity of the 120VAC power supply. |
| | Ignition control | If there is sufficient microamp current, and the 120VAC polarity is correct, but the flame will not stay lit, replace the ignition control. NOTE: Check for proper ground connection on ignition control. |
| | NOTE: Flame should be on at this time | |
| Low flame is on, but no main flame | Air pressure switch (burner blower) | Check for proper supply voltage switching from "NC" to "NO" on ignition control. Check for continuity on wires 18 and 16. Check for air pressure switch adjustment, air tube blockage or misalignment. If these adjustments fail, replace air pressure switch. If the air pressure switch is operational check ignition control. (See "Unable to reach or maintain temperature") |
| | PSU1 (D.C. Power Supply) | Check for 120VAC supply to the primary of the PSU1. If no voltage is present, trace wiring back to the main power switch. If voltage is present, check for 24VDC at the PSU1 secondary. If there is primary voltage, but no secondary voltage, replace the PSU1. |
| | Oven Control | Check for 24VDC supply to control. If no voltage is present, trace wiring back to PSU1. If 24VDC is present, check for a read-out on the display. If there is 24VDC supplied, but there is no read-out on the control display, replace the oven control. If there is a read-out on the control, set the control to maximum temperature. With the control set at maximum temperature, check for 120VAC at the temperature regulation valve. If there is voltage at the temperature regulation valve, proceed to "Temperature regulation valve" for next check. If there is no voltage at the temperature regulation valve, trace wiring back to the oven control. If there is no voltage output at the oven control, check the read-out on the control. If the control reads "ERR_ THERMOCPL" , this indicates that the thermocouple has failed or become disconnected from the oven control. |

| Problem | Cause | Correction |
|---|---|---|
| Low flame is on, but no main flame | Thermocouple (See QR chart on page 66) | Check to be sure that the thermocouple is securely connected to the oven control. If the thermocouple is connected to the oven control, and the control indicates "PROBE FAIL", disconnect the thermocouple from the oven control and measure the resistance of the thermocouple. Resistance: 7Ω - 14Ω If these readings are not achieved, replace the thermocouple. If these readings are correct, proceed. |
| | Temperature regulation valve | Check for 120VAC supplied to temperature regulation valve. If voltage is present, listen for valve to open and close. Also check for opens or shorts in the operating coil. Check for proper gas pressure at the oven manifold. Replace temperature regulation valve as needed. If voltage is not present see "Oven will not heat, Oven control" problem and cause section. |
| Conveyor does not move | Temperature set point has not been reached | If using the Press & Go menu recipes, wait until UI displays the "Ready" status message |
| | Coupling loose or disconnected | Tighten set screw on coupling |
| | Belt link loose or disconnected | Tighten belt, if needed replace belt link. |
| | Conveyor has stretched from use | Remove adequate number of links to tighten the belt |
| | Incorrectly installed | Verify conveyor belt orientation. Shaft should be inserted into motor coupling. |
| | Software issue | Turn OFF the unit using the power switch, turn the unit back ON after 30 seconds. |
| | Failed or failing conveyor stepper motor | Check for resistance on red and blue and again at yellow and white. Resistance should be .65Ω (±10%). |
| | | Check for opens, shorts or grounds |
| | | Change conveyor belt direction in the UI's Settings Menu |
| | Faulty IO board and/or built-in motor drive | Check for 24VDC input on (-V) and (+V) wires |
| | | Check wires are connected properly |
| | | Inspect IO board for damage and replace if needed |
| | Faulty stepper drive (STR8) (See chart on page 70) | Check LEDs to identify alarm codes. Faults disable the motor and can be cleared by cycling power to the drive. |
| | | Try the built-in self test. Anytime switch 8 is moved to the ON position, the drive will automatically rotate the motor back and forth, two turns in each direction. This feature can be used to confirm the motor is correctly wired, selected and operational. |
| | | Check for 24VDC input on (-V) and (+V) wires |
| | | Check wires are connected properly. |
| | | Inspect stepper motor drive for damage and replace if needed |

NOTE: Setting Password is 6-7-8-5-3-5

NOTE: Service Password is 4-5-8-7-5-6

## Troubleshooting Guide – Impinger II Domestic Advantage Digital, Electric

### S/N 0809210000017 to S/N 2104100102812 (Ovens with push button controls)

| Old Model Number | → | New Model Number | Voltage | Hz | Phase |
|---|---|---|---|---|---|
| 1130-080-A | → | 1130-xxx-U or (V) | 208 | 60 Hz | 1 |
| 1130-080-A1 | | | | | |
| 1130-08H-A | | N/A | | | |
| 1131-080-A | → | 1131-xxx-U or (V) | 240 | | |
| 1161-080-A | | | | | |
| 1131-080-A1 | → | 1131-037-U | | | |
| 1131-08H-A | | N/A | | | |
| 1132-080-A | → | 1132-xxx-U or (V) | 208 | | 3 |
| 1132-023-A | | | | | |
| 1162-080-A | | | | | |
| 1132-080-A1 | → | 1132-037-U | | | |
| 1132-08H-A | → | 1172-xxx-U | | | |
| 1132-002-A | → | 1174-xxx-U | | | |
| 1133-080-A | → | 1133-xxx-U or (V) | 240 | | |
| 1133-080-A1 | | | | | |
| 1133-08H-A | → | 1173-xxx-U | | | |

| Problem | Cause | Correction |
|---|---|---|
| Oven fan will not run | Incoming power supply | Check circuit breakers. Reset if required. Call power co. if needed. |
| | Fuses, 10 Amp, motor, and controls | Check, replace if necessary. |
| | Hi-limit thermostat, Oven cavity | Terminals are normally closed. If open, reset thermostat and retest. If thermostat will not hold for maximum oven temperature, and oven is not exceeding temperature setting, check for proper location of capillary bulb in its spring holder. If the capillary checks okay, replace the hi-limit thermostat. |
| | Switch, main power | Check continuity between switch terminals. Replace switch as needed. |
| | Relay, oven start | Check for 208 or 240VAC supplied to coil of relay. If no voltage is present, trace wiring back to main power switch. If voltage is present, check for pull in of relay contacts. Replace relay as needed. |
| | 30 minute time delay (not available on all models) | Check for 208 or 240VAC at terminal #1 to #3 on time delay relay. If voltage is not present, trace wiring back to 10A fuse. If voltage is present at terminal #1, check for 208/240VAC at terminal #2 to #3. If no voltage is present, and oven start relay is closed, replace 30 minute time delay relay. |
| | Relay, main fan | Check for 208 or 240VAC to coil of main fan relay. If no voltage is present, trace wiring back to 20 minute time delay relay. If voltage is present, check to insure that relay contacts are closing. Replace relay as needed. |
| | Main fan motor | Check for supply voltage at motor. If no voltage is present, trace wiring back to main fan relay.<br>WITH POWER OFF: Check for opens, shorts or grounds. Turn fan blade to check for locked rotor. |
| | Capacitor | Check for shorts or grounds. (7mfd)<br>**WARNING**: Capacitor has a stored charge, discharge before testing. |
| No main fan cool down | 30 Minute time delay (not available on all models) | Check for 208 or 240VAC at terminal #2 to #3 while the oven is "on". Turn off the main switch, 208 or 240VAC should continue to be present for 30 minutes. If voltage is not present for approx. 30 minutes, replace the 30 minute time delay. |
| | Oven fan relay | Check for 208 or 240VAC to relay coil, if no voltage is present, trace wiring back to 30 minute time delay. If voltage is present, be sure that relay contacts stay closes during the 30 minute cool down.<br>Replace relay as needed. |
| Main fan runs after 30 minute cool down | Oven start relay | Contacts should open when main power switch is turned off. Replace relay as needed. |

| Problem | Cause | Correction |
|---|---|---|
| Main fan runs after 30 minute cool down, ctd. | 30 Minute time delay (not available on all models) | 208 or 240VAC at terminal #2 should discontinue approx.30 minutes after main power is switched off. If the oven start relay contacts are open, and the voltage continues at terminal #2 of the 30 minute timer, for more than 30 minutes, replace the 30 minute time delay. |
| | Oven fan relay | Check to insure that the relay contacts are opening after the relay coil is de-energized. Replace relay as needed. |
| | 30 Minute time delay (not available on all models) | NOTE: On/Off operation of the main power switch will set the timer to 30 minutes. If the timer is accidentally reset, turn off the main circuit breaker for 15 seconds to cancel. |
| No control box cooling | Incoming power | Check circuit breakers, reset if required. Check fuses and hi-limit for an open circuit or trips. Check power plug to be sure it is firmly in receptacle. Measure incoming power, call power co. if needed. |
| | Switch, main power | Check continuity between switch terminals. Replace switch as needed. |
| | Cooling fans | Check for supply voltage at cooling fans. If no voltage is present, trace wiring back to power switch. If voltage is present, and motor does not run, check for opens, shorts or grounds.<br>WITH POWER OFF: Check for locked rotor. |
| No automatic control box cooling | Incoming power supply | Check circuit breakers, reset if required. Check fuses and hi-limit for an open circuit or trips. Check power plug to be sure it is firmly in receptacle. Measure incoming power, call power co. if needed. |
| | Cooling fan thermostat | Check the cooling fan thermostat. (Thermostat closes at 120 F and opens at 100 F). With the cooling fan thermostat pre-heated, check for continuity. If switch is open, replace cooling fan thermostat. |
| | Cooling fans | Check for supply voltage at cooling fan. If no voltage is present, trace wiring back to cooling fan thermostat. If voltage is present, and motor does not run, check for opens, shorts or grounds. WITH POWER OFF: Check for locked rotor. |
| Oven will not heat | Main fan motor | Check for main fan operation. If it is not operating, refer to "Oven fan will not run". |
| | Air pressure switch | This normally open switch should close when the main fan is activated. Refer to page 61. Replace as needed. |
| | Control transformer | Check for 208 or 240VAC supply to the primary of the control transformer. If no voltage is present, trace wiring back to the main power switch. If voltage is present, check for 24VAC at the transformer secondary. If there is primary voltage, but no secondary voltage, replace the control transformer. |
| | Oven control | Check for 24VAC supply to control. If no voltage is present, trace wiring back to control transformer. If 24VAC is present, check for a read-out on the display. If there is 24VAC supplied, but there is no read-out on the control display, replace the oven control.<br>If there is a read-out on the control, set the control to maximum temperature. With the control set at maximum temperature, check for supply voltage at mercury contactor. If there is voltage at the mercury contactor, proceed to "mercury contactor" for next check. If there is no voltage at the mercury contactor, trace wiring back to the oven control.<br>If there is no voltage output at the oven control, check the read-out on the control. If the control reads "PROBE FAIL", this indicates that the thermocouple has failed or become disconnected from the oven control. |

| Problem | Cause | Correction |
|---|---|---|
| Oven will not heat, ctd. | Thermocouple<br>(see QR chart on page 66) | Check to be sure that the thermocouple is securely connected to the oven control. If the thermocouple is connected to the oven control, and the control indicates "PROBE FAIL", disconnect the thermocouple from the oven control and measure the resistance of the thermocouple. The thermocouple should read approx.11Ω<br>If these readings are not achieved, replace the thermocouple. If these readings are correct, proceed. |
| | Oven control | If the thermocouple checks good, but the oven control display indicates that there is a thermocouple failure, replace the oven control. If the oven control indicates a temperature reading but the oven will not heat, proceed. |
| | Thermocouple<br>(see QR chart on page 66) | WITH POWER ON AND THERMOCOUPLE ATTACHED TO THE OVEN CONTROL: Measure the DC millivolt output of the thermocouple. Refer to the thermocouple chart on page 66 for proper millivolt readings. If these readings are not achieved, replace thermocouple. |
| | Oven control | If the thermocouple checks good, but there is no voltage output to the mercury contactor, replace the oven control. If there is voltage output to the mercury contactor, proceed. |
| | Mercury contactor | Check for supply voltage to the contactor coil. If voltage is present and the contactor will not activate, replace the mercury contactor.<br>Also check each contactor for high voltage input and output. |
| | Heating element(s) | Check the Amp draw on each power leg for proper load. Check the specification plate for rating information. If the amp draw is high or low, check the individual elements for opens, shorts and proper resistance.<br>WITH POWER OFF: To check resistance of the elements, remove all leads from the elements and use a digital multimeter.<br>The element resistance should be as follows: 208V – 27 Ω approx. 240V – 36Ω approx.<br>Replace heating elements as needed. |
| Oven heats with switch off | Mercury contactor | The mercury contactor has probably failed in the closed position. If there is no voltage to the operating coil, but there is high voltage at the contactor output, replace the mercury contactor. |
| Intermittent heating | Thermal/overload of motor | The main fan motor is equipped with internal thermal protection and will cease to operate if overheating occurs. As the motor overheats and then cools, this will cause the oven to cycle on and off intermittently. Improper ventilation or lack of preventive maintenance may cause this. Also, most of the problems listed under "Oven will not heat" can cause intermittent failure. |
| Conveyor(s) will not run Models with -050- will have a split belt | Power supply | Check circuit breakers, reset if required. Check power plug to be sure it is firmly in receptacle. Measure incoming power, call power co. if needed. |
| | Fuse, 10 Amp | Check, replace if necessary. |
| | Fuse holder | Check, replace if necessary. |
| | Hi-limit thermostat, oven cavity | Terminals are normally closed. If open, reset thermostat and retest. If thermostat will not hold for maximum oven temperature, and oven is not exceeding temperature setting, check for proper location of capillary bulb in its spring holder. If the capillary checks okay, replace the hi-limit thermostat. |
| | Power switch | Check continuity between switch terminals. Replace switch as needed. |
| | Control transformer | Check for supply voltage to the primary of the control transformer. If no voltage is present, trace wiring back to the oven power relay. If voltage is present, check for 24 VAC at the transformer secondary. If there is primary voltage but no secondary voltage, replace control transformer. |

| Problem | Cause | Correction |
|---|---|---|
| Conveyor(s) will not run ctd. | Conveyor motor | Check for supply voltage to the conveyor motor. If no voltage is present, trace wiring back to the primary of the control transformer. If voltage is present and the motor will not run, check the motor windings for opens or shorts.<br>WITH POWER OFF: Check the motor windings as follows:<br>S/N: 2052462 and below (Red Dot) — Grey to Black 240Ω approx.<br>Grey to Brown 240Ω approx.<br>Brown to Black 480Ω approx.<br>S/N: 2052463 and above (Brown Dot) — Grey to Black 360Ω approx.<br>Grey to Brown 360Ω approx.<br>Brown to Black 720Ω approx.<br>If any of the above fails, replace conveyor motor. |
| | Capacitor, conveyor motor | Check for shorts or grounds. Replace capacitor as needed. **WARNING**: Capacitor has a stored charge, discharge before testing. S/N: 2052462 and below (Red Dot) = 1.2mfd<br>S/N: 2052463 and above (Brown Dot) = 1.0mfd |
| | Switch, conveyor reversing | Check continuity between switch terminals. Replace switch as needed. |
| | Oven control | If there is supply voltage to the motor, and the motor, capacitor, and reversing switch check good, replace the oven control. |
| Conveyor motor runs, but there is no speed display | NOTE: Display will indicate "Belt Jam" | |
| | Oven control | Check for output voltage from oven control to Hall Effect sensor (sensor is located in conveyor motor). Measure voltage at the motor connector, red wire and yellow wire. Voltage should be approx. 10VDC. If no voltage is present, trace wiring back to oven control. If there is no voltage present at the oven control, replace the oven control. |
| | Conveyor motor | If there is voltage supplied to the Hall Effect sensor, check for a frequency output from the Hall Effect sensor. Measure frequency across the yellow and white wires at the motor connector.<br>Frequency reading should be approx. 25 – 100 Hz. If these readings are not achieved, replace. |
| | Oven control | If the Hall Effect sensor readings are correct, but there is no speed indicated on the display, replace the oven control. |

## Troubleshooting Guide – Impinger II Domestic 1130,1131,1132,1133 easyTouch, Electric

### S/N: 2104100102813 and above (easyTouch controls)

| Problem | Cause | Correction |
|---|---|---|
| UI blank | Oven not plugged in, panel breaker tripped | Check panel breaker and plug |
| | | Ensure input voltage is within specifications |
| | Faulty fuses/fuse holder | Replace fuses on back panel |
| | | Inspect fuse holders for cracks and replace if needed |
| | Wiring Issue | Inspect UI cable for damage |
| | | Unplug and plug the UI cable back in |
| | | Replace UI cable |
| | Faulty UI | Check for cracks or damaged screen |
| | | Check cable connection to UI for fit |
| | | Install new UI with correct software revision |
| | Faulty power switch | Check continuity through switch. Check for incoming 120VAC on terminals. Replace if needed. |
| | Faulty DC power supply | Check for steady 120VAC input between #59 (N) and #74(L) |
| | | Check for steady 24VDC output between (+) and (-) wires |
| | | Check for physical damage on the circuit board. Replace if needed |
| | Faulty IO board | Check for 24VDC input on (-V) and (+V) wires |
| | | Check cable connection to UI for fit |
| UI screen locked up, frozen, nonresponsive to touch | Software issue | Turn OFF the unit using the power switch, turn the unit back ON after 30 seconds. |
| | Damaged or cracked touchscreen | Install new UI with correct software revision |
| Unable to read USB | Faulty flash drive | Retry with known good quality flash drive |
| | Incorrect USB format | Make sure flash drive is formatted using FAT32 |
| | USB cable disconnected | Check if USB connector is seated properly |
| | Faulty UI | Check for cracks or damaged screen |
| | | Check cable connection to UI for fit |
| | | Install new UI with correct software revision |
| Unable to load USB files | Faulty flash drive | Retry with known good quality flash drive |
| | Files on flash drive incorrect or corrupt | Delete all files on flash drive and reload updated files |
| | Faulty USB socket | Inspect USB socket for damage and replace if needed |

| Problem | Cause | Correction |
|---|---|---|
| Oven fan will not run | Incoming power supply | Check circuit breakers, reset if required. Check power plug to be sure it is firmly in receptacle. Measure incoming power, call power co. if needed. |
| | Fuses, 10 Amp, motor, and controls | Check, replace if necessary. |
| | Hi-limit thermostat, Oven cavity | Terminals are normally closed. If open, reset thermostat and retest. If thermostat will not hold for maximum oven temperature, and oven is not exceeding temperature setting, check for proper location of capillary bulb in its spring holder. If the capillary checks okay, replace the hi-limit thermostat. |
| | Switch, main power | Check continuity between switch terminals. Replace switch as needed. |
| | Main fan motor | Check for supply voltage at motor. If no voltage is present, trace wiring. WITH POWER OFF: Check for opens, shorts or grounds. Turn fan blade to check for locked rotor. |
| | Capacitor | Check for shorts or grounds. (7mfd) **WARNING**: Capacitor has a stored charge, discharge before testing |
| No control box cooling | Incoming power | Check circuit breakers, reset if required. Check fuses and hi-limit for an open circuit or trips. Check power plug to be sure it is firmly in receptacle. Measure incoming power, call power co. if needed. |
| | Switch, main power | Check continuity between switch terminals. Replace switch as needed. |
| | Cooling fans | Check for supply voltage at cooling fans. If no voltage is present, trace wiring back to power switch. If voltage is present, and motor does not run, check for opens, shorts or grounds. WITH POWER OFF: Check for locked rotor. |
| Oven will not heat | Main fan motor | Check for main fan operation. If it is not operating, refer to “Oven fan will not run”. |
| | Air pressure switch | This normally open switch should close when the main fan is activated. Test between #64 and # 63. Refer to page 61 for proper adjustment. Replace as needed. |
| | PSU1 (Control Transformer) | Check for 208 or 240VAC supply to the primary of the PSU1. If no voltage is present, trace wiring back to the main power switch. If voltage is present, check for 24VDC at the transformer secondary. If there is primary voltage, but no secondary voltage, replace the PSU1 . |
| | Incorrect model selected in UI | Turn OFF the unit using the power switch, turn the unit back ON after 30 seconds. The model displayed in the UI initialization screen should be 1100. If it isn’t go to UI settings and select the correct model. |

| Problem | Cause | Correction |
|---|---|---|
| Oven will not heat, ctd. | Thermocouple/ thermocouple wiring (see QR chart on page 66) | Verify the thermocouple is connected to the IO board |
| | | Inspect the thermocouple wires and connectors.<br>Check wires are not cut or disconnected |
| | | Check resistance for open probe. Resistance: 7Ω - 14Ω |
| | | Check DC voltage between red and yellow wires. Use chart on page 66 to verify proper reading. |
| | | Check for opens, shorts or grounds |
| | I/O (Oven control) | If the thermocouple checks good, but there is no voltage input to the SSRs, replace the oven control. If there is voltage input to the SSRs, proceed. |
| | SSR (Solid State Relay) | Check for DC voltage to the SSRs<br>Measure SSRs output current. Inspect SSRs for damage. Replace if needed. |
| | | Check SSRs LEDs are turning ON and OFF continuously when there is a call for heat |
| | Component high limit thermostat tripped | Turn the power switch OFF and wait for the machine to cooldown (this may take upwards of one hour). Reset the high limit capillary thermostat located on the machine rear panel. Inspect the high limit capillary thermostat connections for damage. Turn the power switch ON. Check that the blower motor is ON. If the condition persists, replace the high limit capillary thermostat. (Trips point =662F +/-10%) |
| | Heating element(s) | Check the Amp draw on each power leg for proper load. Check the specification plate for rating information. If the amp draw is high or low, check the individual elements for opens, shorts and proper resistance.<br>WITH POWER OFF: To check resistance of the elements, remove all leads from the elements and use a digital multimeter.<br>The element resistance should be as follows:<br>208V – 27 Ω approx. 240V – 36Ω approx. Replace heating elements as needed. |
| | Kitchen ventilation affecting temperatures | Check make up air from ventilation hood or air conditioning vents are directed away from the oven |
| | Possible incorrect temperature calibration | Check calibration and re-calibrate unit if needed |
| Uneven heating | Fingers incorrectly installed | Make sure fingers are installed correctly |
| | Door not closed or does not close properly | Verify door is closed correctly. Check latches and hinges. Check if there is excessive gap between door and cavity |
| Overcooked or undercooked product | Incorrect temperature setting | Make sure oven temperature is correct |
| | Incorrect conveyor speed | Make sure the conveyor is properly calibrated |
| | Defective thermocouple/ thermocouple wiring | Verify the thermocouple is connected to the IO board |
| | | Inspect the thermocouple wires and connectors. Check wires are not cut or disconnected |
| Intermittent heating | Thermal/overload of motor | The main fan motor is equipped with internal thermal protection and will cease to operate if overheating occurs. As the motor overheats and then cools, this will cause the oven to cycle on and off intermittently. Improper ventilation or lack of preventive maintenance may cause this. |

| Problem | Cause | Correction |
|---|---|---|
| Conveyor does not move | Temperature set point has not been reached | If using the Press & Go menu recipes, wait until UI displays the "Ready" status message |
| | Coupling loose or disconnected | Tighten set screw on coupling |
| | Belt link loose or disconnected | Tighten belt, if needed replace belt link |
| | Conveyor has stretched from use | Remove adequate number of links to tighten the belt |
| | Incorrectly installed | Verify conveyor belt orientation. Shaft should be inserted into motor coupling |
| | Software issue | Turn OFF the unit using the power switch, turn the unit back ON after 30 seconds. |
| | | Go to Manual Mode and change belt speed |
| | Failed or failing conveyor stepper motor | Check for resistance on red and blue and again at yellow and white. Resistance should be .65Ω (±10%). |
| | | Check for opens, shorts or grounds |
| | | Change conveyor belt direction in the UI's Settings Menu |
| | Faulty IO board and/or built-in motor drive | Check for 24VDC input on (-V) and (+V) wires |
| | | Check wires are connected properly |
| | | Inspect IO board for damage and replace if needed |
| | Faulty stepper drive (STR8) (See chart on page 70) | Check LEDs to identify alarm codes. Faults disable the motor and can be cleared by cycling power to the drive. |
| | | Try the built-in self test. Anytime switch 8 is moved to the ON position, the drive will automatically rotate the motor back and forth, two turns in each direction. This feature can be used to confirm the motor is correctly wired, selected and operational. |
| | | Check for 24VDC input on (-V) and (+V) wires |
| | | Check wires are connected properly |
| | | Inspect stepper motor drive for damage and replace if needed |

NOTE: Setting Password is 6-7-8-5-3-5

NOTE: Service Password is 4-5-8-7-5-6

## Troubleshooting Guide – Impinger II Domestic Advantage Digital, Electric 1135

**(Ovens with push button controls))**

| Old Model Number | → | New Model Number | Voltage | Gas Type | Hz | Phase |
|---|---|---|---|---|---|---|
| N/A | → | 1135-xxx-U | N/A | 480 | 60 HZ | 3 |

| Problem | Cause | Correction |
|---|---|---|
| Oven fan will not run | Incoming power supply | Check circuit breakers. Reset if required. Call power co. if needed. |
| | Step down transformer (480VAC-240VAC) | Verify line voltage in on wires 4A and 3A at 480VAC and output voltage is 240VAC on terminals 6 and 5 |
| | Fuses, 10 Amp, motor, and controls | Check, replace if necessary. |
| | Hi-limit thermostat, Oven cavity | Terminals are normally closed. If open, reset thermostat and retest. If thermostat will not hold for maximum oven temperature, and oven is not exceeding temperature setting, check for proper location of capillary bulb in its spring holder. If the capillary checks okay, replace the hi-limit thermostat. |
| | Switch, main power | Check continuity between switch terminals. Replace switch as needed. |
| | Relay, oven start | Check for 240VAC supplied to coil of relay. If no voltage is present, trace wiring back to main power switch. If voltage is present, check for pull in of relay contacts. Replace relay as needed. |
| | 30 minute time delay | Check 240VAC at terminal #1 to #3 on time delay relay. If voltage is not present, trace wiring back to the transformer. If voltage is present at terminal #1, check for 240VAC at terminal #2 to #3. If no voltage is present, and oven start relay is closed, replace 30 minute time delay relay. |
| | Relay, main fan | Check for 240VAC to coil of main fan relay. If no voltage is present, trace wiring back to 30 minute time delay relay. If voltage is present, check to insure that relay contacts are closing. Replace relay as needed. |
| | Main fan motor | Check for supply voltage at motor. If no voltage is present, trace wiring back to main fan relay.<br>WITH POWER OFF: Check for opens, shorts or grounds. Turn fan blade to check for locked rotor. |
| | Capacitor | Check for shorts or grounds. 7.5 MFD<br>**WARNING**: Capacitor has a stored charge, discharge before testing. |
| No main fan cool down | 30 Minute time delay | Check for 240VAC at terminal #2 to #3 while the oven is "on". Turn off the main switch, 240VAC should continue to be present for 30 minutes. If voltage is not present for approx. 30 minutes, replace the 30 minute time delay. |
| | Oven fan relay | Check for 240VAC to relay coil, if no voltage is present, trace wiring back to 30 minute time delay. If voltage is present, be sure that relay contacts stay closes during the 30 minute cool down. Replace relay as needed. |
| Main fan runs after 30 minute cool down | Oven start relay | Contacts should open when main power switch is turned off. Replace relay as needed. |

| Problem | Cause | Correction |
|---|---|---|
| Main fan runs after 30 minute cool down, ctd. | 30 Minute time delay | 240VAC at terminal #2 should discontinue approx. 30 minutes after main power is switched off. If the oven start relay contacts are open, and the voltage continues at terminal #2 of the 30 minute timer, for more than 30 minutes, replace the 30 minute time delay. |
| | Oven fan relay | Check to insure that the relay contacts are opening after the relay coil is de-energized. Replace relay as needed. |
| | 30 Minute time delay | NOTE: On/Off operation of the main power switch will set the timer to 30 minutes. If the timer is accidentally reset, turn off the main circuit breaker for 15 seconds to cancel. |
| No control box cooling | Incoming power | Check circuit breakers, reset if required. Check fuses, transformer, and hi-limit for an open circuit or trips. Check power plug to be sure it is firmly in receptacle. Measure incoming power, call power co. if needed. |
| | Switch, main power | Check continuity between switch terminals. Replace switch as needed. |
| | Cooling fan(s) | Check for supply voltage at cooling fan. If no voltage is present, trace wiring back to power switch. If voltage is present, and motor does not run, check for opens, shorts or grounds.<br>WITH POWER OFF: Check for locked rotor. |
| No automatic control box cooling | Incoming power supply | Check circuit breakers, reset if required. Check fuses, transformer, and hi-limit for an open circuit or trips. Check power plug to be sure it is firmly in receptacle. Measure incoming power, call power co. if needed. |
| | Cooling fan thermostat | Check the cooling fan thermostat. (Thermostat closes at 120 F and opens at 100 F). With the cooling fan thermostat pre-heated, check for continuity. If switch is open, replace cooling fan thermostat. |
| | Cooling fan(s) | Check for supply voltage at cooling fan. If no voltage is present, trace wiring back to cooling fan thermostat. If voltage is present, and motor does not run, check for opens, shorts or grounds.<br>WITH POWER OFF: Check for locked rotor. |
| Oven will not heat | Main fan motor | Check for main fan operation. If it is not operating, refer to “Oven fan will not run”. |
| | Air pressure switch | This normally open switch should close when the main fan is activated. Refer to page 61 for proper adjustment. Replace as needed. |
| | Control transformer | Check for 240VAC supply to the primary of the control transformer. If no voltage is present, trace wiring back to the main power switch. If voltage is present, check for 24VAC at the transformer secondary. If there is primary voltage, but no secondary voltage, replace the control transformer. |
| | Oven control | Check for 24VAC supply to control. If no voltage is present, trace wiring back to control transformer. If 24VAC is present, check for a read-out on the display. If there is 24VAC supplied, but there is no read-out on the control display, replace the oven control.<br>If there is a read-out on the control, set the control to maximum temperature (see installation operations manual for temperature adjustment).<br>With the control set at maximum temperature, check for supply voltage at mercury contactor. If there is voltage at the mercury contactor, proceed to “mercury contactor” for next check. If there is no voltage at the mercury contactor, trace wiring back to the oven control. If there is no voltage output at the oven control, check the read-out on the control. If the control reads “PROBE FAIL”, this indicates that the thermocouple has failed or become disconnected from the oven control. |

| Problem | Cause | Correction |
|---|---|---|
| Oven will not heat, ctd. | Thermocouple<br>(see QR chart on page 66) | Check to be sure that the thermocouple is securely connected to the oven control. If the thermocouple is connected to the oven control, and the control indicates "PROBE FAIL", disconnect the thermocouple from the oven control and measure the resistance of the thermocouple. The thermocouple should read approx. 11Ω. If these readings are not achieved, replace the thermocouple. If these readings are correct proceed. |
| | Thermocouple | WITH POWER ON AND THERMOCOUPLE ATTACHED TO THE OVEN CONTROL: Measure the DC millivolt output of the thermocouple. Refer to the thermocouple chart on page 66 for proper millivolt readings. If these readings are not achieved, replace thermocouple. |
| | Oven control | If the thermocouple checks good, but the oven control display indicates that there is a thermocouple failure, replace the oven control. I the oven control indicates a temperature reading but the oven will not heat, proceed. |
| | | If the thermocouple checks good, but there is no voltage output to the mercury contactor, replace the oven control. If there is voltage output to the mercury contactor, proceed. |
| | Mercury contactor | Check for supply voltage to the contactor coil. If voltage is present and the contactor will not activate, replace the mercury contactor.<br>Also check each contactor for high voltage input and output. |
| | Heating element(s) | Check the Amp draw on each power leg for proper load. Check the specification plate for rating information. If the amp draw is high or low, check the individual elements for opens, shorts and proper resistance.<br>240VAC element = 36Ω<br>WITH POWER OFF: To check resistance of the elements, remove all leads from the elements and use a digital multimeter.<br>The element resistance should be as follows: 480V – ohms approx. Replace heating elements as needed. |
| Oven heats with switch off | Mercury contactor | The mercury contactor has probably failed in the closed position. If there is no voltage to the operating coil, but there is high voltage at the contactor output, replace the mercury contactor. |
| Intermittent heating | Thermal/overload of motor | The main fan motor is equipped with internal thermal protection and will cease to operate if overheating occurs. As the motor overheats and then cools, this will cause the oven to cycle on and off intermittently. Improper ventilation or lack of preventive maintenance may cause this. Also, most of the problems listed under "Oven will not heat" can cause intermittent failure. |
| Conveyor(s) will not run | Power supply | Check circuit breakers, reset if required. Check power plug to be sure it is firmly in receptacle. Measure incoming power, call power co. if needed. |
| | Fuse, 10 Amp | Check, replace if necessary. |
| | Fuse holder | Check, replace if necessary. |
| | Transformer | Check, replace if necessary. |
| | Hi-limit thermostat, oven cavity | Terminals are normally closed. If open, reset thermostat and retest. If thermostat will not hold for maximum oven temperature, and oven is not exceeding temperature setting, check for proper location of capillary bulb in its spring holder. If the capillary checks okay, replace the hi-limit thermostat. |
| | Power switch | Check continuity between switch terminals. Replace switch as needed. |
| | Control transformer | Check for supply voltage to the primary of the control transformer. If no voltage is present, trace wiring back to the switch. If voltage is present, check for 24 VAC at the transformer secondary. If there is primary voltage but no secondary voltage, replace control transformer. |

| Problem | Cause | Correction |
|---|---|---|
| Conveyor will not run, ctd. | Conveyor motor | Check for supply voltage to the conveyor motor. Ifno voltage is present, trace wiring back to the primary of the control transformer. If voltage is present and the motor will not run, check the motor windings for opens or shorts. WITH POWER OFF: Check the motor windings as follows:<br>S/N: 2052462 and below Grey to Black 240Ω approx.<br>(Red Dot) Grey to Brown 240Ω approx.<br>Brown to Black 480Ω approx.<br>S/N: 2052463 and above Grey to Black 360Ω approx.<br>(Brown Dot) Grey to Brown 360Ω approx.<br>Brown to Black 720Ω approx.<br>If any of the above fails, replace conveyor motor. |
| | Capacitor, conveyor motor | Check for shorts or grounds. Replace capacitor as needed.<br>**WARNING**: Capacitor has a stored charge, discharge before testing.<br>S/N: 2052462 and below = 1.2mfd<br>S/N: 2052463 and above = 1.0mfd |
| | Switch, conveyor reversing | Check continuity between switch terminals. Replace switch as needed. |
| | Oven control | If there is supply voltage to the motor, and the motor, capacitor, and reversing switch check good, replace the oven control. |
| Conveyor motor runs, but there is no speed display | NOTE: Display will indicate "Belt Jam" | |
| | Oven control | Check for output voltage from oven control to Hall Effect sensor (sensor is located in conveyor motor). Measure voltage at the motor connector, red wire and yellow wire. Voltage should be approx. 10VDC. If no voltage is present, trace wiring back to oven control. If there is no voltage present at the oven control, replace the oven control. |
| | Conveyor motor | If there is voltage supplied to the Hall Effect sensor, check for a frequency output from the Hall Effect sensor. Measure frequency across the yellow and white wires at the motor connector.<br>Frequency reading should be approx. 25 – 100 Hz. If these readings are not achieved, replace conveyor motor. If the readings are achieved, proceed. |
| | Oven control | If the Hall Effect sensor readings are correct, but there is no speed indicated on the display, replace the oven control. |

## Troubleshooting Guide – Impinger II Non-Domestic Advantage Digital, Electric

**(Ovens with push button controls))**

| Old Model Number | → | New Model Number | Gas | Voltage | Hz | Phase |
|---|---|---|---|---|---|---|
| 1164-000-EA | → | 1164-xxx-E or (V) | | | | |
| 1164-080-EA | | | N/A | 400/230 | 50 HZ | 3 |
| N/A | → | 1134-xxx-N | N/A | 380/208 | 50 HZ | 3 |

| Problem | Cause | Correction |
|---|---|---|
| Oven fan will not run | Incoming power supply | Check breaker, reset if required. Check power plug to be sure it is firmly in receptacle. Measure incoming power, call power co. if needed. |
| | Oven cavity hi-limit thermostat | Terminals are normally closed, opens at 660°F (350°C). If open, reset and test oven for proper operation. If thermostat will not hold for maximum oven temperature, and oven is not exceeding control setting, check for proper location of capillary bulb ion its spring holder. If above checks are okay, replace hi-limit thermostat. |
| | Control Box Hi-limit | Check if open, replace if necessary. |
| | Fuse, 10 amp | Check, replace if necessary. |
| | Fuse holder | Check, replace if necessary. |
| | Switch, main fan | With power off, check continuity between switch terminals. Replace as needed. |
| | Motor, main fan | Check for opens, shorts or grounds. With power off, turn fan blade to check for locked rotor. |
| | Capacitor | Check for shorts or grounds. 7.5<br>**WARNING**: Capacitor has a stored charge, discharge before testing. |
| No control box cooling | Incoming power supply | Check breaker, reset if required. Check power plug to be sure it is firmly in receptacle. Measure incoming power, call power company if needed. |
| | Oven cavity hi-limit thermostat | Terminals are normally closed, opens at 660°F (350°C). If open, reset and test oven for proper operation. If thermostat will not hold for maximum oven temperature, and oven is not exceeding control setting, check for proper location of capillary bulb in its spring holder. If above checks are okay, replace hi-limit thermostat. |
| | Fuse, 10 amp | Check, replace if necessary. |
| | Fuse holder | Check, replace if necessary. |
| | Cooling fan thermostat | Check the cooling fan thermostat (thermostat closes at 120°F and opens at 100°F). With the cooling fan thermostat pre-heated, check for continuity. If thermostat is open, replace cooling fan thermostat. |
| | Cooling fan | Line voltage should now be at the cooling fan. If voltage is present, check motor for opens, shorts or grounds. With power off, check for locked rotor. |
| Oven will not heat | Main fan | If not operating, refer to "Oven fan will not run". |
| | Control transformer | Check for supply voltage to the primary of control transformer. If no voltage is present, trace wiring back to filter. If voltage is present, check for 24VAC at transformer secondary. If there is primary voltage, but no secondary voltage, replace control transformer. |
| | Air pressure switch | Check air switch terminals for supply voltage to terminals "NO" and "COM". If voltage is present on one side only, check for air tube blockage or misalignment. If these are okay, adjust air pressure switch or replace if necessary. |

| Problem | Cause | Correction |
|---|---|---|
| Oven will not heat, ctd. | Oven control | Check for 24VAC supply to oven control. If no voltage is present, trace wiring back to control transformer. Check for supply voltage to oven control. If no voltage is present, trace wiring back to oven fan switch. If voltage is present, check for a read-out on the display. If there is no read-out on the oven display, replace oven display. If there is a read- out on the oven control, set the control to maximum temperature. With the control at maximum temperature, check for supply voltage to the mercury contactor/ soild state relay. If there is voltage at the contactors, proceed to "Mercury contactor"/"Soild State Relay" for next check. If there is no voltage at the mercury contactor/soild state relay, trace wiring back to the oven control. If there is no voltage output at the oven control, check the read-out on the oven control. If the oven control reads "PROBE FAIL" this indicates that the thermocouple has failed or become disconnected from the oven control. |
| | Thermocouple (see QR chart on page 66) | Check to see that the thermocouple is securely connected to the oven control. If the thermocouple is connected to the oven control, and the display indicates "PROBE FAIL", disconnect the thermocouple from the oven control and measure the resistance of the thermocouple. The thermocouple should read approx. 11Ω. If these readings are not achieved, replace the thermocouple. If these readings are correct, proceed. |
| | | WITH POWER ON AND THERMOCOUPLE ATTACHED TO THE OVEN CONTROL: Measure the DC millivolt output of the thermocouple. Refer to the thermocouple chart on page 66 for proper millivolt readings. If these readings are not achieved, replace thermocouple. |
| | Oven control | If the thermocouple checks good, but the oven control indicates that there is a thermocouple failure, replace the oven control. If the oven control indicates a temperature reading but the oven will not heat, proceed. |
| | | If the thermocouple checks good, but there is no supply voltage output to the contactor, replace the oven control. If there is supply voltage output to the contactor, proceed. |
| | S.S. Relays / Mercury Contactor | Check for supply voltage to the contactor coil. If voltage is present and the contactor will not activate, replace the contactor Also check each contactor for high voltage input and output. |
| | Heating element(s) | Check the Amp draw on each power leg for proper load. Check the specification plate for rating information. If the Amp draw is high or low, check the individual elements for opens, shorts and proper resistance. WITH POWER OFF; To check resistance of the elements, remove all leads from the elements and use a digital multimeter. The element resistance should be as follows: 230V – 33 ohm. Replace heating elements as needed. |
| Oven heats with switch off | Contactor | The contactor has probably failed in the closed position. If there is no voltage at the operating coil, but there is high voltage output from the contactor, replace the contactor. |
| Intermittent heating | Thermal/overload of main fan motor | The main fan motor is equipped with internal thermal protection and will cease to operate if overheating occurs. As the motor overheats and cools, this will cause the heating system to cycle on and off intermittently. Improper ventilation or lack of preventive maintenance may cause this problem. Also, most of the problem listed under "Oven will not heat" can cause intermittent failure. |
| Conveyor will not run Display reads "Belt Jam" | Incoming power supply | Check breaker, reset if required. Check power plug to be sure it is firmly in receptacle. Measure incoming power, call power company if needed. |
| | Fuse, 10 amp | Check, replace if necessary. |
| | Fuse holder | Check, replace if necessary. |

| Problem | Cause | Correction |
|---|---|---|
| Conveyor will not run Display reads"Belt Jam," ctd. | Switch, main fan | With power off, check continuity between switch terminals. Replace as needed. |
| | Control transformer | Check for supply voltage to the primary of control transformer. If no voltage is present, trace wiring back to oven fan switch. If voltage is present, check for 24VAC at transformer secondary. If there is primary voltage, but no secondary voltage, replace control transformer. |
| | Conveyor motor | Check for supply voltage to the conveyor motor at wire #10 to neutral. If no voltage is present, trace wiring back to the oven fan switch. If voltage is present, but the motor will not run, check the motor windings for opens or shorts. If any of the above fail, replace the conveyor motor.<br>S/N: 2052462 and below (Red Dot) — Grey to Black 240Ω approx.; Grey to Brown 240Ω approx.; Brown to Black 480Ω approx.<br>S/N: 2052463 and above (Brown Dot) — Grey to Black 360Ω approx.; Grey to Brown 360Ω approx.; Brown to Black 720Ω approx. |
| | Capacitor, conveyor motor | Check for shorts or grounds. Replace capacitor as needed.<br>**WARNING**: Capacitor has a stored charge, discharge before testing.<br>S/N: 2052462 and below = 1.2mfd<br>S/N: 2052463 and above = 1.0mfd |
| | Switch, conveyor reversing | Check continuity between switch terminals. Replace switch as needed. |
| | Oven control | If there is voltage supplied to the motor, and the motor, capacitor and reversing switch check good, replace the oven control. |
| Conveyor motor runs, but there is no speed control | Oven control | Check for output voltage from oven control to Hall Effect sensor (sensor is located in the conveyor motor). Measure voltage at the motor connector, red wire, and yellow wire. Voltage should be approx. 10VDC. If no voltage is present, trace wiring back to oven control. If there is no voltage output at the oven control, replace oven control. |
| | Conveyor motor | If there is voltage supplied to the Hall Effect sensor, check for a frequency output from the Hall Effect sensor. Measure frequency across the yellow and white wires in the motor connector.<br>Frequency reading should be approx. 25-100 Hz. If these readings are not achieved, replace conveyor motor. If the readings are achieved, proceed. |
| | Oven control | If the Hall Effect sensor readings are correct, but there is no speed indicated on the display, replace the oven control |

## Troubleshooting Guide – Impinger II International 1164 easyTouch, Electric

**S/N: 2201100100578 and above (easyTouch controls)**

| Problem | Cause | Correction |
|---|---|---|
| UI blank | Oven not plugged in, panel breaker tripped | Check panel breaker and plug |
| | | Ensure input voltage is within specifications |
| | Faulty fuses/fuse holder | Replace fuses on back panel |
| | | Inspect fuse holders for cracks and replace if needed |
| | Wiring Issue | Inspect UI cable for damage |
| | | Unplug and plug the UI cable back in |
| | | Replace UI cable |
| | Faulty UI | Check for cracks or damaged screen |
| | | Check cable connection to UI for fit |
| | | Install new UI with correct software revision |
| | Faulty power switch | Check continuity through switch. Check for incoming 120VAC on terminals. Replace if needed. |
| | Faulty DC power supply | Check for steady 120VAC input between #59 (N) and #74(L) |
| | | Check for steady 24VDC output between (+) and (-) wires |
| | | Check for physical damage on the circuit board. Replace if needed |
| | Faulty IO board | Check for 24VDC input on (-V) and (+V) wires |
| | | Check cable connection to UI for fit |
| UI screen locked up, frozen, nonresponsive to touch | Software issue | Turn OFF the unit using the power switch, turn the unit back ON after 30 seconds. |
| | Damaged or cracked touchscreen | Install new UI with correct software revision |
| Unable to read USB | Faulty flash drive | Retry with known good quality flash drive |
| | Incorrect USB format | Make sure flash drive is formatted using FAT32 |
| | USB cable disconnected | Check if USB connector is seated properly |
| | Faulty UI | Check for cracks or damaged screen |
| | | Check cable connection to UI for fit |
| | | Install new UI with correct software revision |
| Unable to load USB files | Faulty flash drive | Retry with known good quality flash drive |
| | Files on flash drive incorrect or corrupt | Delete all files on flash drive and reload updated files |
| | Faulty USB socket | Inspect USB socket for damage and replace if needed |

| Problem | Cause | Correction |
|---|---|---|
| Oven fan will not run | Incoming power supply | Check breaker, reset if required. Check power plug to be sure it is firmly in receptacle. Measure voltage. |
| | Fuses, 10 Amp / fuse holders | Check, replace if necessary. |
| | Hi-limit thermostat, Oven cavity | Terminals are normally closed, opens at 660°F (350° C). If open, reset and test oven for proper operation. If thermostat will not hold for maximum oven temperature, and oven is not exceeding control setting, check for proper location of capillary bulb ion its spring holder. If above checks are okay, replace hi-limit thermostat. |
| | Control Box Hi-limit | Check if open, replace if necessary. |
| | Switch, main power | Check continuity between switch terminals. Replace switch as needed. |
| | Main fan motor | Check for supply voltage at motor. If no voltage is present, trace wiring. WITH POWER OFF: Check for opens, shorts or grounds. Turn fan blade to check for locked rotor. |
| | Capacitor | Check for shorts or grounds. (7mfd) **WARNING**: Capacitor has a stored charge, discharge before testing |
| No control box cooling | Incoming power | Check circuit breakers, reset if required. Check fuses and hi-limit for an open circuit or trips. Check power plug to be sure it is firmly in receptacle. Measure incoming power, call power co. if needed. |
| | Switch, main power | Check continuity between switch terminals. Replace switch as needed. |
| | Cooling fans | Check for supply voltage at cooling fans. If no voltage is present, trace wiring back to power switch. If voltage is present, and motor does not run, check for opens, shorts or grounds.<br>WITH POWER OFF: Check for locked rotor. |
| Oven will not heat | Main fan motor | Check for main fan operation. If it is not operating, refer to "Oven fan will not run". |
| | Air pressure switch | This normally open switch should close when the main fan is activated. Test between #64 and # 63. Refer to page 61 for proper adjustment. Replace as needed. |
| | PSU1 (Control Transformer) | Check for 208 or 240VAC supply to the primary of the PSU1. If no voltage is present, trace wiring back to the main power switch. If voltage is present, check for 24VDC at the PSU1. If there is input 208/240VAC, but no 24VAC output, replace the PSU1 . |
| | Incorrect model selected in UI | Turn OFF the unit using the power switch, turn the unit back ON after 30 seconds. The model displayed in the UI initialization screen should be 1100. If it isn't go to UI settings and select the correct model. |

| Problem | Cause | Correction |
|---|---|---|
| Oven fan will not heat, ctd. | Thermocouple/ thermocouple wiring (see chart on page 66) | Verify the thermocouple is connected to the IO board |
| | | Inspect the thermocouple wires and connectors. Check wires are not cut or disconnected |
| | | Check resistance for open probe. Resistance: 7Ω - 14Ω |
| | | Check DC voltage between red and yellow wires. Use chart on page 66 to verify proper reading. |
| | | Check for opens, shorts or grounds |
| | I/O (Oven control) | If the thermocouple checks good, but there is no voltage input to the SSRs, replace the oven control. If there is voltage input to the SSRs, proceed. |
| | SSR (Solid State Relay) | Check for DC voltage to the SSRs<br>Measure SSRs output current. Inspect SSRs for damage. Replace if needed. |
| | | Check SSRs LEDs are turning ON and OFF continuously when there is a call for heat |
| | Component high limit thermostat tripped | Turn the power switch OFF and wait for the machine to cool down (this may take upwards of one hour). Reset the high limit capillary thermostat located on the machine rear panel. Inspect the high limit capillary thermostat connections for damage. Turn the power switch ON. Check that the blower motor is ON. If the condition persists, replace the high limit capillary thermostat. (Trips point =662F +/-10%) |
| | Heating element(s) | Check the Amp draw on each power leg for proper load. Check the specification plate for rating information. If the amp draw is high or low, check the individual elements for opens, shorts and proper resistance.<br>WITH POWER OFF: To check resistance of the elements, remove all leads from the elements and use a digital multimeter.<br>The element resistance should be as follows:<br>230V – 33 Ω approx. Replace heating elements as needed. |
| | Kitchen ventilation affecting temperatures | Check make up air from ventilation hood or air conditioning vents are directed away from the oven |
| | Possible incorrect temperature calibration | Check calibration and re-calibrate unit if needed |
| | Air pressure switch | This normally open switch should close when the main fan is activated. Test between #64 and # 63. Refer to page 61 for proper adjustment. Replace as needed. |

| Problem | Cause | Correction |
|---|---|---|
| Uneven heating | Fingers incorrectly installed | Make sure fingers are installed correctly |
| | Door not closed or does not close properly | Verify door is closed correctly. Check latches and hinges. Check if there is excessive gap between door and cavity |
| Overcooked or undercooked product | Incorrect temperature setting | Make sure oven temperature is correct |
| | Incorrect conveyor speed | Make sure the conveyor is properly calibrated |
| | Defective thermocouple/ thermocouple wiring | Verify the thermocouple is connected to the IO board |
| | | Inspect the thermocouple wires and connectors. Check wires are not cut or disconnected |
| Intermittent heating | Thermal/overload of motor | The main fan motor is equipped with internal thermal protection and will cease to operate if overheating occurs. As the motor overheats and then cools, this will cause the oven to cycle on and off intermittently. Improper ventilation or lack of preventive maintenance may cause this. |
| Conveyor does not move | Temperature set point has not been reached | If using the Press & Go menu recipes, wait until UI displays the "Ready" status message |
| | Coupling loose or disconnected | Tighten set screw on coupling |
| | Belt link loose or disconnected | Tighten belt, if needed replace belt link |
| | Conveyor has stretched from use | Remove adequate number of links to tighten the belt |
| | Incorrectly installed | Verify conveyor belt orientation. Shaft should be inserted into motor coupling |
| | Software issue | Turn OFF the unit using the power switch, turn the unit back ON after 30 seconds. |
| | | Go to Manual Mode and change belt speed |
| | Failed or failing conveyor stepper motor | Check for resistance on red and blue and again at yellow and white. Resistance should be .65Ω (±10%). |
| | | Check for opens, shorts or grounds |
| | | Change conveyor belt direction in the UI's Settings Menu |
| | Faulty IO board and/or built-in motor drive | Check for 24VDC input on (-V) and (+V) wires |
| | | Check wires are connected properly |
| | | Inspect IO board for damage and replace if needed |
| | Faulty stepper drive (STR8) (See chart on page 70) | Check LEDs to identify alarm codes. Faults disable the motor and can be cleared by cycling power to the drive. |
| | | Try the built-in self test. Anytime switch 8 is moved to the ON position, the drive will automatically rotate the motor back and forth, two turns in each direction. This feature can be used to confirm the motor is correctly wired, selected and operational. |
| | | Check for 24VDC input on (-V) and (+V) wires |
| | | Check wires are connected properly |
| | | Inspect stepper motor drive for damage and replace if needed |

NOTE: Setting Password is 6-7-8-5-3-5

NOTE: Service Password is 4-5-8-7-5-6

THIS PAGE INTENTIONALLY LEFT BLANK

# Section 4
# Component Replacement Procedures

**⚠Warning**

Before removing or installing any component in the Impinger Oven, be sure to disconnect all electrical power and shut off gas supply.

## Ignition Control

**REPLACEMENT**

Shut off power at main breaker:

1. Remove conveyor.
2. Remove appropriate control box cover.
3. Disconnect wires from plug-in terminal strip, note wire numbers and location.
4. Remove two (2) screws from mounting bracket and remove.
5. Reassemble in reverse order. Check system operation.

## Burner Control(Honeywell) S/N2045408 and Above

**REPLACEMENT**

Shut off power at main breaker:

1. Remove appropriate control box cover.
2. Unplug module from gas valve.
3. Replace new module and plug into valve.
4. Replace appropriate control box cover.

## Air Pressure Switch

**REPLACEMENT**

Shut off power at main breaker:

1. Remove conveyor.
2. Remove appropriate control box cover.
3. Disconnect wires from switch making note of wire number and location for re-installation.
4. Remove air tube from switch assembly.
5. Remove switch from wire hanger.
6. Install new switch in reverse, make sure air tube is not blocked or misaligned.
7. Be sure to calibrate new air pressure switch. Calibration:Turn adjusting screw on air pressure switch fully counter clockwise. Turn oven "on". Turn adjusting screw on air pressure switch clockwise until heat shuts off. Turn adjusting screw on air pressure switch counter clockwise ¼ turn.

NOTE: To adjust air pressure switch, remove cover from the switch to expose adjusting screw. To increase sensitivity, turn screw counter-clockwise; to decrease sensitivity, turn screw clockwise. Check for proper line voltage switching from NC to NO as the air pressure switch closes.

## Conveyor Drive Motor

**REPLACEMENT**

Shut off power at main breaker:

1. Remove conveyor.
2. Remove conveyor rear cover.
3. Disconnect wiring from motor and mark for reassembly.
4. Remove coupler assembly from motor shaft.
5. Remove four (4) screws and remove conveyor motor and mounting bracket.
6. Remove mounting bracket from conveyor motor assembly.
7. Reassemble in reverse order.

## Capacitor, Conveyor Motor

**REPLACEMENT**

Shut off power at main breaker:

1. Remove rear cover.
2. Discharge capacitor before removing wires. Mark wires for reassembly.
3. Remove mounting screw and remove capacitor.
4. Reassemble in reverse order.
5. **Warning**: Capacitor has a stored charge, discharge before handling or testing.

## Reversing Switch

**REPLACEMENT**

Shut off power at main breaker:

1. Remove rear cover.
2. Disconnect wiring from reversing switch and mark for reassembly.
3. Remove mounting nut and remove reversing switch.
4. Reassemble in reverse order and check system operation.

## Reversing Conveyor Direction

Shut off power at oven switch:

1. Set reversing switch in the other position.
2. Turn oven"on" and check for proper operation.

## Fuse holder

### REPLACEMENT

Shut off power at main breaker:

1. Remove rear cover.
2. Remove two (2) wires, note wire number and location.
3. Remove locknut on backside of fuse holder and push out.
4. Reinstall in reverse order and check system operation.

## Gas Valve

### REPLACEMENT AND ADJUSTMENT

Shut off power at main breaker and shut off gas:

1. Remove conveyor panel front cover.
2. Disconnect the gas piping from the back of the unit.
3. Remove the four (4) screws from the incoming nipple mounting bracket.
4. Remove incoming nipple.
5. Disconnect wiring from the gas valve and mark for reassembly.
6. Remove pilot tube. Disconnect pipe union just above gas valve and remove assembly.
7. Reassemble in reverse order (check all pipe fittings for leaks).
8. Check and adjust manifold pressure. Remove pressure tap located in gas piping above the gas valve prior to the burner orifice and install manometer. Adjustment screw is located on the front of the valve. Remove plastic cap and adjust as needed: 3.5" W.C. for natural gas, 10" W.C. for LP.
9. Reassemble in reverse order and check for leaks around cover.

## HSI

### REPLACEMENT

Shut off power at main breaker and shut off gas:

1. Remove appropriate control box cover.
2. Disconnect wires from burner control then remove the gas valve and piping.
3. Remove three (3) mounting screws and remove burner venturi.
4. Remove mounting nut and remove hot surface igniter assembly.
5. Reassemble in reverse order and check system operation.
6. Check all gas line fittings for leaks.

## Igniter/Sensor Assembly (Export)

### REPLACEMENT

Shut off power at main breaker and shut off gas:

1. Remove rear cover.
2. Remove gas valve assembly. (see "Gas Valve")
3. Remove temperature regulation valve. (see "Temperature Regulating Valve")
4. Disconnect all wires from burner and mark for reassembly.
5. Remove screws from burner tube and remove burner venturi.
6. Remove two (2) mounting screws and remove igniter/sensor assembly from burner venturi.
7. Reassemble in reverse order and check system operation. Check all gas line fittings for leaks.

## Temperature Regulating Valve

### REPLACEMENT

Shut off power at main breaker and shut off gas:

1. Remove appropriate control box cover.
2. Remove bypass tube from burner manifold.
3. Remove wiring from valve and mark for reassembly.
4. Remove four mounting nuts from burner manifold and disconnect pipe union.
5. Remove temperature regulation valve and piping from oven.
6. Reassemble in reverse order. Check all gas line fittings for leaks.

## Bypass Orifice

### REPLACEMENT

Shut off power at main breaker and shut off gas:

1. Remove appropriate control box cover.
2. Remove pilot tube from bypass orifice and remove orifice.
3. Reassemble in reverse order and check system operation. Check all gas connections for leaks.

## Main Orifice

### REPLACEMENT

Shut off power at main breaker and shut off gas:

1. Remove rear control box cover.
2. Remove burner manifold. See "Temperature Regulating Valve".
3. Remove main burner orifice from burner manifold.
4. Reassemble in reverse order and check system operation.
5. Check all gas line fittings for leaks.

## Thermostat, High Limit, Oven Cavity

### REPLACEMENT

Shut off power at main breaker:

1. Remove conveyor and bottom finger assembly. Remove rear control box cover.
2. Remove capillary bulb from bracket in oven chamber and pull capillary tube through tube into control box.
3. Remove all wires and mark for reassembly.
4. Remove mounting nut and remove thermostat.
5. Reassemble in reverse order and check system operation. Be sure capillary tube is securely in the mount.

   NOTE: Push reset button on new thermostat.

## On-Off Switch (Power)

### REPLACEMENT

Shut off power at main breaker:

1. Shut off power at main breaker.
2. Remove conveyor and front control box cover.
3. Depress spring clips on sides of switch and push out.
4. Remove wires from switch and mark for reassembly.
5. Reassemble in reverse order and check system operation.

   NOTE: Make sure switch housing is fully seated in control box housing.

## Capacitor, Main Fan Motor

### REPLACEMENT

Shut off power at main breaker:

1. Remove rear cover.
2. Discharge capacitor. **Warning**: Capacitor has a stored charge, discharge before handling or testing.
3. Remove capacitor.
4. Reassemble in reverse order and check system operation.

## Relay

### REPLACEMENT

Shut off power at main breaker:

1. Remove appropriate control box cover.
2. Remove wires from relay, note wire numbers and location for re-installation.
3. Remove two (2) screws from relay base and replace relay.
4. Reassemble in reverse order, making sure wire connections are properly seated.
5. Check system operation.

## Thermostat, Cooling Fan

### REPLACEMENT

Shut off power at main breaker:

1. Remove control box cover and conveyor if necessary.
2. Remove two (2) wires from thermostat, note wire number and location.
3. Remove two (2) mounting screws and replace thermostat.
4. Reassemble in reverse order and check system operation.

## Cooling Fan Motor

### REPLACEMENT

Shut off power at main breaker:

1. Remove appropriate control box cover and conveyor if necessary.
2. Remove four (4) mounting screws from fan frame.
3. Disconnect power cord and remove fan.
4. Reassemble in reverse order and check system operation. Check for air flow.

## Main Fan and Motor

### REPLACEMENT

Shut off power at main breaker and shut off gas:

1. Shut off gas supply.
2. Remove motor cover from back of oven.
3. Disconnect wiring and mark for reassembly.
4. Remove bolts and slide back straight out of the oven.
5. Loosen the bolt from fan hub and remove fan from motor shaft.

   NOTE: Measure distance from fan blade to rear wall assembly before removal to aid in reassembly.

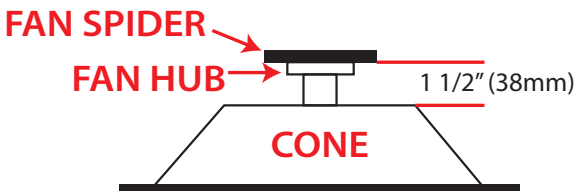


Note: Measurement is made from the Cone to the Fan Spider

6. Remove four (4) screws from motor support assembly.
7. Remove motor mount clamp and remove motor from oven back.
8. Remove motor mount from motor.
9. Reassemble in reverse order and check system operation.

## Heating Element

### REPLACEMENT

Shut off power at main breaker:

1. Remove back cover.
2. Disconnect heating element wires and mark for reassembly.
3. Disconnect motor wiring and mark for reassembly.
4. Remove oven back from oven.
5. Remove fan shroud.
6. Heating element may now be unbolted and removed.
7. Check new heating element for proper voltage. Reassemble in reverse order and check for proper operation.

## Burner Blower Motor

### REPLACEMENT

Shut off power at main breaker:

1. Remove rear cover.
2. Unplug motor connector.
3. Remove three (3) screws from blower tube at burner housing.
4. Remove air shutter assembly from old motor for installation on new motor assembly.
5. Reassemble in reverse order and check system operation.

   NOTE: Check air shutter at approximately ½ open and adjust to get a blue flame with an occasional tip of yellow under high flame. A view port in the burner assembly should be used to observe flame.

## Control and Burner Transformer

### REPLACEMENT

Shut off power at main breaker:

1. Remove appropriate control box cover.
2. Remove two (2) mounting screws from transformer base, wiring and mark for reassembly, and remove transformer.
3. Reassemble in reverse order and check system operation.

## Bearing, Conveyor

### REPLACEMENT

Shut off power at main breaker:

1. Remove conveyor from oven and place on a flat work surface.
2. Remove roll pin from shaft then the connecting links from conveyor belting.
3. Move drive shaft or idler shaft toward end of conveyor, and shaft with bearing will now slip out of conveyor frame.
4. Remove bearing from conveyor shaft.
5. Reassemble in reverse order and check system operation.

## Oven Control and Display

### REPLACEMENT

Shut off power at main breaker:

1. Remove control box cover and front panel.
2. Remove all wiring connections and mark for reassembly.
3. Remove oven control by pulling control from the mounting pins. Remove control from oven.
4. Before installing new oven control, set voltage jumper (located at the bottom center of the oven control) to the proper voltage/frequency (120V or 240V, 50HZ or 60HZ) position. Install the four (4) pushbutton extensions (included with the oven control) by pushing the extensions onto the four (4) set buttons on control.
5. Reassemble in reverse order and check system operation.
   NOTE: Set the oven control for the proper operating mode. The 1100 series ovens use a single temperature control system. The oven control must be set to the proper operating mode. Set the control as follows: With the oven power switch "off", depress the "time" and "up" buttons and turn the oven "on". Control will indicate "Imp I or Imp II". Release the buttons, The control will indicate "Temp to store". Press the "up" or "down" until "Imp II" appears on the display. Press the "temp" button. The control is now set for single burner operation.

## Thermocouple (Type K)

### REPLACEMENT

Shut off power at main breaker:

For standard Finger configurations:

1. Remove rear panel assembly.
2. Remove front control box cover.
3. Remove thermocouple from bracket in oven chamber and pull thermocouple through tube into control box.
4. Remove two (2) thermocouple wires from temperature control. Note wire color and location for reassembly.
5. Reassemble in reverse order and check system operation.

For Fastbake Finger configurations:

1. Remove conveyor and bottom finger assembly.
2. Remove front control box cover.
3. Remove thermocouple from bracket in oven chamber and pull thermocouple through tube into control box.
4. Remove two (2) thermocouple wires from temperature control. Note wire color and location for reassembly
5. Reassemble in reverse order and check system operation.

**Thermocouple DCmV Chart**

| Temperature F° | Temperature C° | DCmV |
|---|---|---|
| 72 | 22 | 0.8mV |
| 200 | 93 | 2.8mV |
| 250 | 121 | 4.0mV |
| 300 | 149 | 5.1mV |
| 350 | 177 | 6.0mV |
| 400 | 204 | 7.1mV |
| 450 | 232 | 8.2mV |
| 500 | 260 | 9.3mV |
| 550 | 288 | 10.4mV |
| 600 | 316 | 11.5mV |

For additional Thermocouple Measurement Scan QR Code:

LINCOLN

Lincolnfp.com

## Techrite Module (Export Models)

### REPLACEMENT

Shut off power at main breaker and shut off gas:

1. Remove appropriate control box cover.
2. Remove wires from plug-in terminal strip, note wire numbers and location.
3. Remove two (2) screws from mounting bracket and remove.
4. Reassemble in reverse order. Check system operation.

   See page 75 for fault errors.

## Techrite Module LED Flash Code (Export Models)

The following codes may occur during startup.

| LED Flash Code (Long flashes–short flashes) | Description |
|---|---|
| 0-2 | Normal Operation – Start Up Delay. |
| 1-0 | Normal Operation. |
| 1-1 | Flame failure detected. |
| 1-2 | Waiting for main pressure switch. |
| 1-3 | Waiting for second pressure switch. |
| 1-4 | Waiting for flame sense to go OFF. |
| 1-5 | Purge operation in progress (pre purge, inter purge or post purge). |
| 1-6 | Waiting for Vent Switch contacts before continuing. |
| 1-7 | Waiting for Hot Surface Ignitor pre-heat timer to expire. |
| 1-8 | Waiting for fan tacho feedback signal to be within acceptance window (module option). |

## Techrite Module LED Flash Code (Export Models)

The following codes are invoked as a result of a lockout condition.

| LED Flash Code (Long flashes–short flashes) | Description |
|---|---|
| 2-1 | Maximum retries exceeded. |
| 2-2 | Lockout due to flame failure. |
| 2-3, 2-4, 2-5 | Hardware failure on module output(s). Possible hardware failure in module. |
| 2-6 | Hardware failure on flame sensing circuit. |
| 2-7 | Hardware failure in module. |
| 2-8 | Combustion Fan timeout (where fitted). |
| 2-9 | Vent Switch lockout (where fitted). |

The following codes are invoked as a result of a lockout condition / hardware fault.

| LED Flash Code (Long flashes–short flashes) | Description |
|---|---|
| 3-1 | Lockout due to main pressure switch opening (where fitted). |
| 3-2 | Lockout due to second pressure switch opening (where fitted). |
| 3-3 | Lockout due to fan tacho feedback signal failing (where fitted). |
| 3-4 | Lockout due to internal fault (software error). |
| 3-5 | Lockout due to internal fault (EEPROM error). |
| 3-6 | Lockout due to internal fault (micro controller communications error). |

## Power Filter

### REPLACEMENT

Shut off power at main breaker:

1. Remove control box cover.
2. Remove all wires from the power filter, note all wire numbers for reinstallation.
3. Reassemble in reverse order and check system operation.

## easyTouch Controller

### REPLACEMENT

Shut off power at main breaker:

1. Remove conveyor assembly.
2. Remove front control box cover.
3. Remove HDMI cable and mark for reassembly.
4. Remove six (6) screws that hold touchscreen in place. Remove touchscreen.
5. Reassemble in reverse order and check system operation.
   NOTE:Set the oven control for the proper operating mode. The easyTouch controller has several options, from the home screen select the settings icon. The password is 458756 and select the down arrow twice. Make sure the 1100 series is highlighted and verify how many belts the oven has.

## I/O Board

### REPLACEMENT

Shut off power at main breaker:

1. Remove conveyor assembly.
2. Remove front control box cover.
3. Disconnect all wires and mark for reassembly.
4. Remove I/O by pulling it from the mounting pins. Remove the I/O from oven.
5. Reassemble in reverse order and check system operation.

## Mercury Contactor

### REPLACEMENT

Shut off power at main breaker:

1. Remove rear control box cover.
2. Disconnect all wires and mark for reassembly.
3. Remove screws from mounting bracket and remove contactor.
4. Reassemble in reverse order and check system operation.

## Solid State Relay

### REPLACEMENT

Shut off power at main breaker:

1. Remove rear control box column.
2. Disconnect all wires and mark for reassembly.
3. Remove screws from mounting bracket and remove contactor.
4. Reassemble in reverse order and check system operation.

## 24 Volt Power Supply

### REPLACEMENT

Shut off power at main breaker:

1. Remove conveyor assembly.
2. Remove front control box cover.
3. Disconnect all wires and mark for reassembly.
4. Remove four (4) screws that hold power supply in place. Remove power supply.
5. Reassemble in reverse order and check system operation.

## UI Alarm Messages Guide for easyTouch Controller

| UI Alarm Message | Cause | Correction |
|---|---|---|
| "ERR_THERMOCPL" | The thermocouple disconnected | Verify the thermocouples is connected to the IO Board. |
| | | Inspect the thermocouple wires and connectors to verify wires are not cut or disconnected. |
| | | Automatic recovery when fault condition is removed. |
| "ERR_OVERHEAT_TRIP" | Thermal error is detected. | Verify the cooling fans are running. |
| | | Check the cooling fan thermostat. Automatic, normally open, measures surface temperature. Closes at 120 F (49 C) and reopens at 100 F (38 C). |
| | | Verify the control box limit is not tripped. See (control limit) in troubleshooting.. |
| | | Automatic recovery when fault condition is removed. |
| "ERR_IO_SW_NA" | IO Software inapplicable. | Verify the version software and unplug unit for 30 sec. to reboot unit. |
| | | Flash or re-flash the unit with the current software. |

**NOTE**: Setting Password is 6-7-8-5-3-5

## Conveyor Motor Driver

### REPLACEMENT

Shut off power at main breaker and shut off gas:

1. Remove conveyor assembly.
2. Remove control box cover and front panel.
3. Disconnect all wires and mark for reassembly.
4. Remove two (2) screws that hold conveyor motor driver in place. Remove conveyor motor driver.
5. Reassemble in reverse order and check system operation.

## Conveyor Motor Driver

### LED Flash Code

In the event of a drive fault or alarm the green light will flash one or two times followed by a series of red flashes the pattern will repeat until the alarm is cleared.

## Conveyor Motor Driver

### Dip Switches Configuration

The optional stepper controller will have several dip switches on it. When replacing this controller makes sure the following switches are in the proper sequence.

Switch 1, 2, 5, 7, and 8 are off.
Switch 3, 4, and 6 are on.
The rotary switch is set to 9.

When switch eight is moved to the on position the drive will automatically rotate the motor back and forth two turns in each direction this feature can be used to confirm the motor is correctly wired, selected and operational.

| LED Flash Code | Description |
|---|---|
| One solid green light | No alarm, motor disabled |
| Green light flashing | No alarm, motor enabled. |
| Red light flashing | Configuration or memory error; contact the factory for assistance. |
| One green light followed by 4 red flashes | Power supply voltage too high fault. |
| One green light followed by 5 red flashes | Overcurrent / short circuit fault. |
| One green light followed by 6 red flashes | Open motor winding fault. |
| Two green flashes followed by 3 red flashes | Internal voltage out of range fault. |
| Two green flashes followed by 4 red flashes | Power supply voltage too low alarm. |

## 1116-000-A, 1117-000-A
## Schematic - S/N 2038616 to S/N 0809210000016

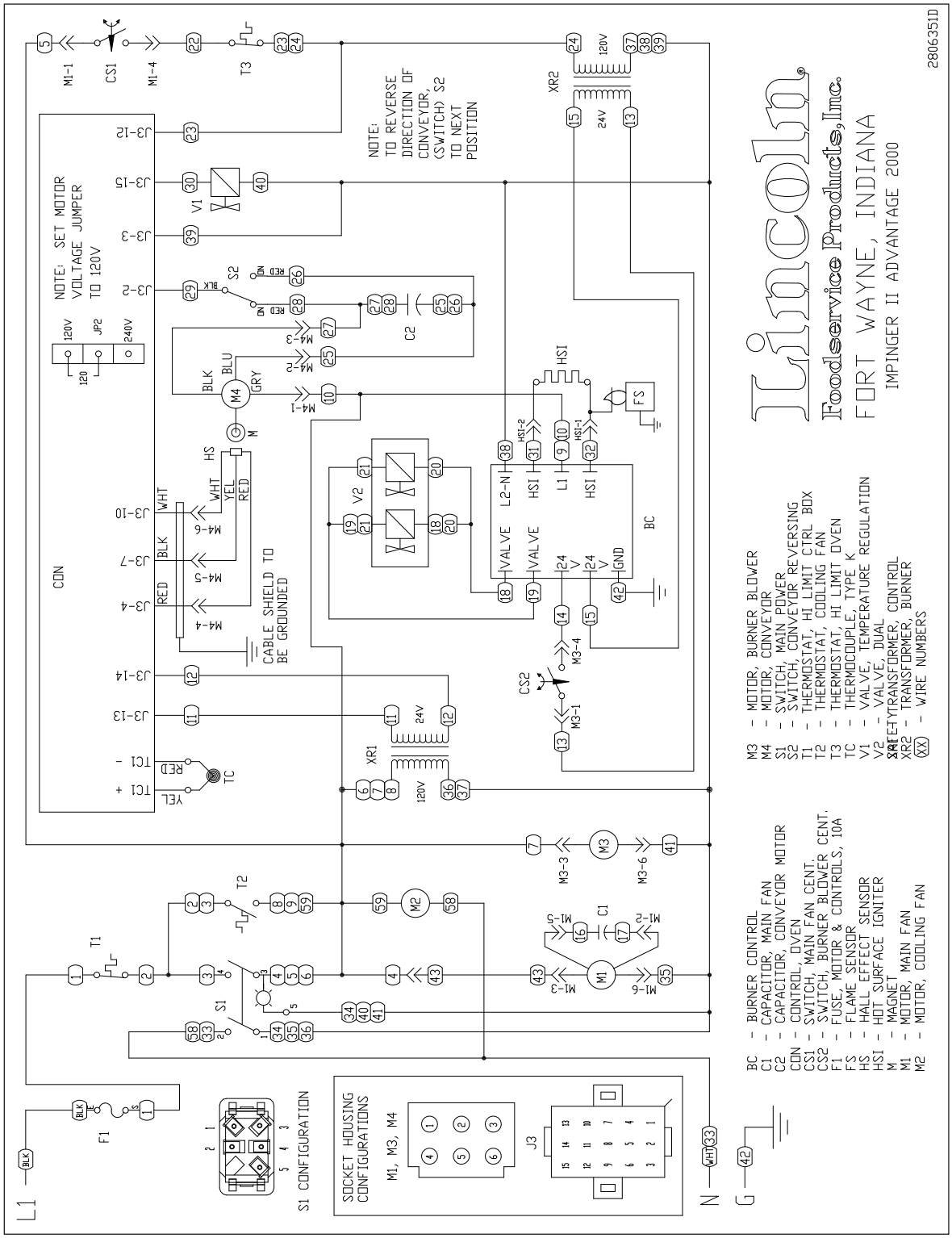

# 1116, 1117
# Schematic - S/N 0809210000017 and Above

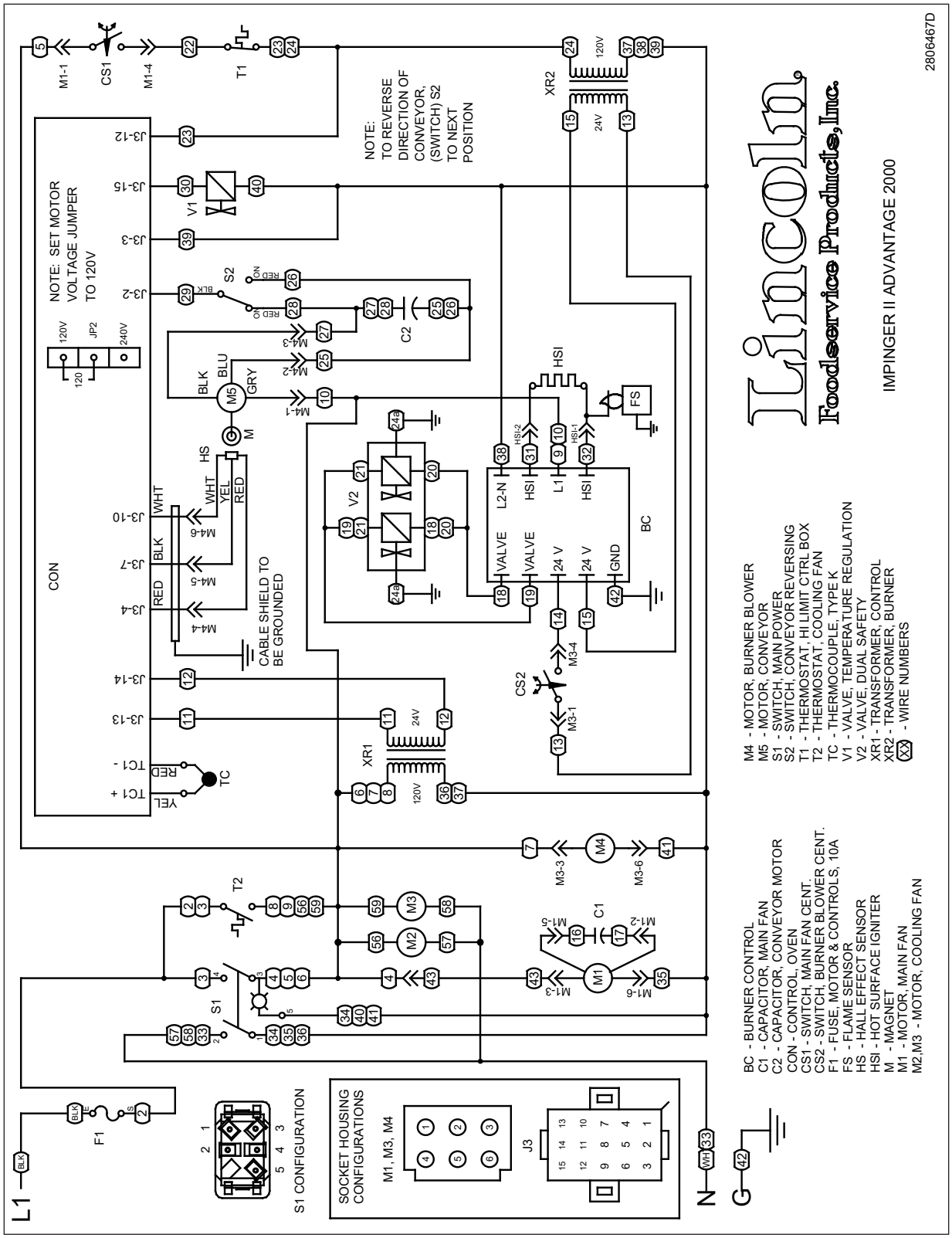

# 1116, 1117
# Split Belt Schematic - S/N 0809210000017 and Above

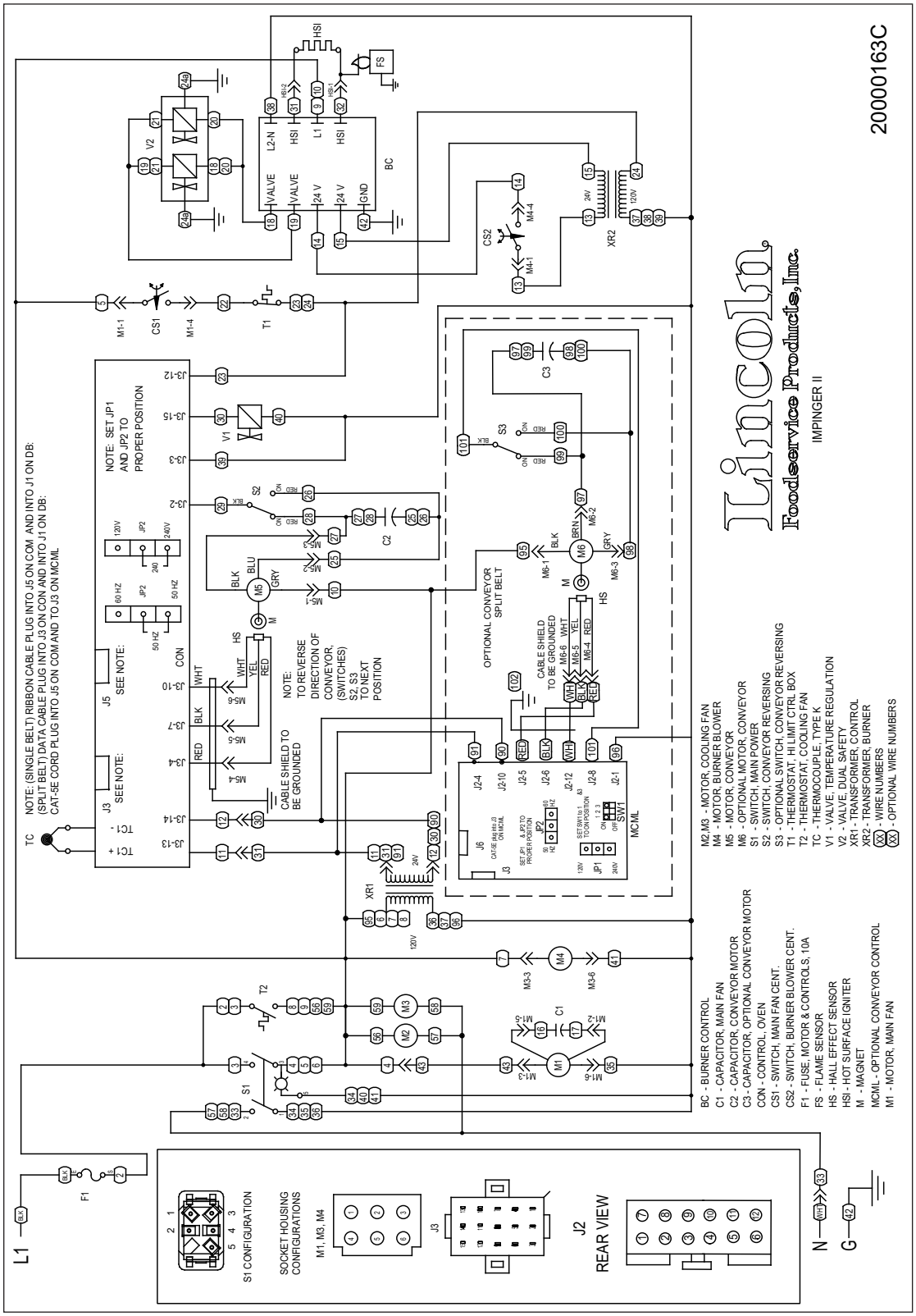

# 1116, 1117
# easyTouch Schematic - S/N 2106100101445 and Above

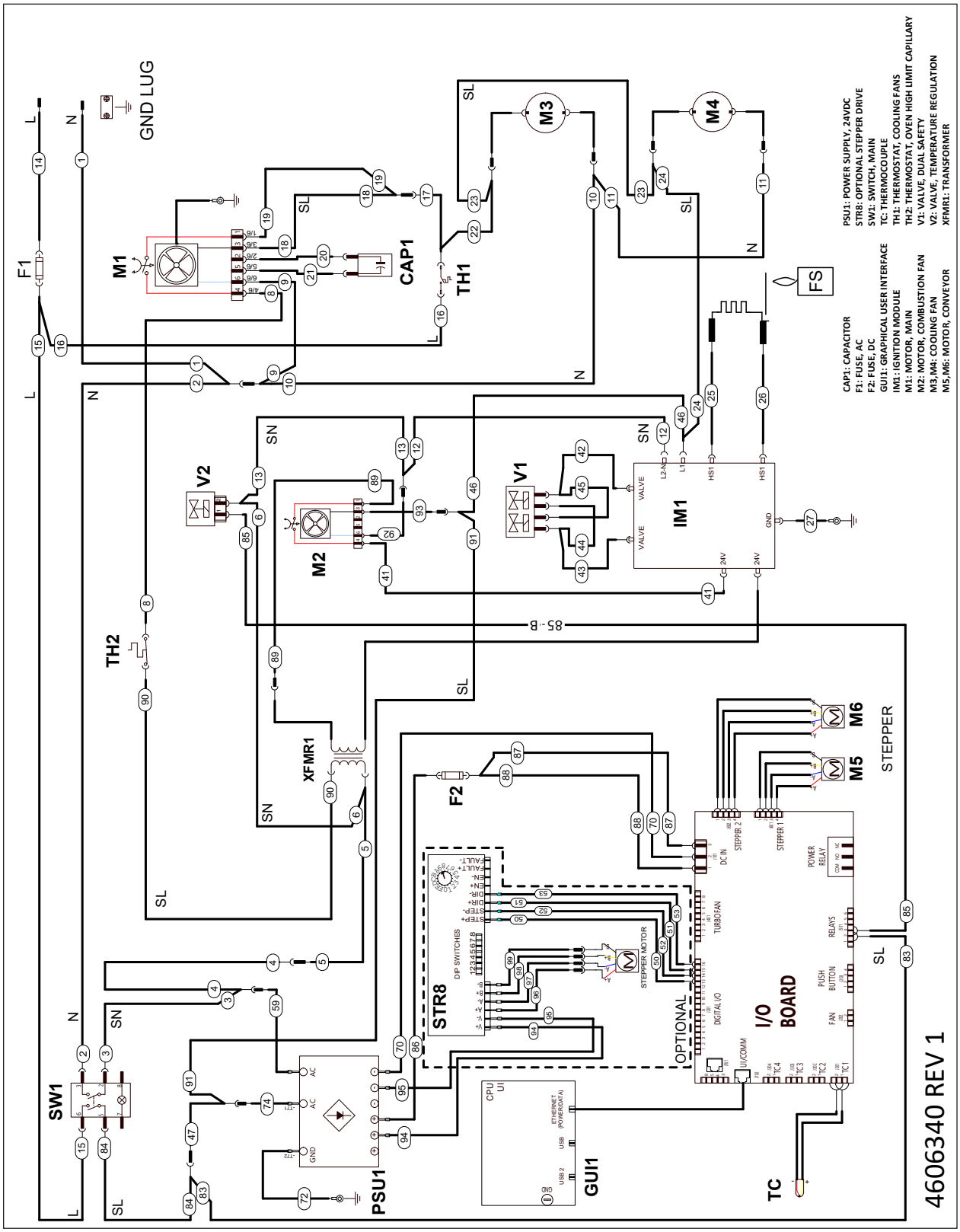

# 1154, 1155, 1157, 1158
# Schematic - S/N 1902100102504 and Below

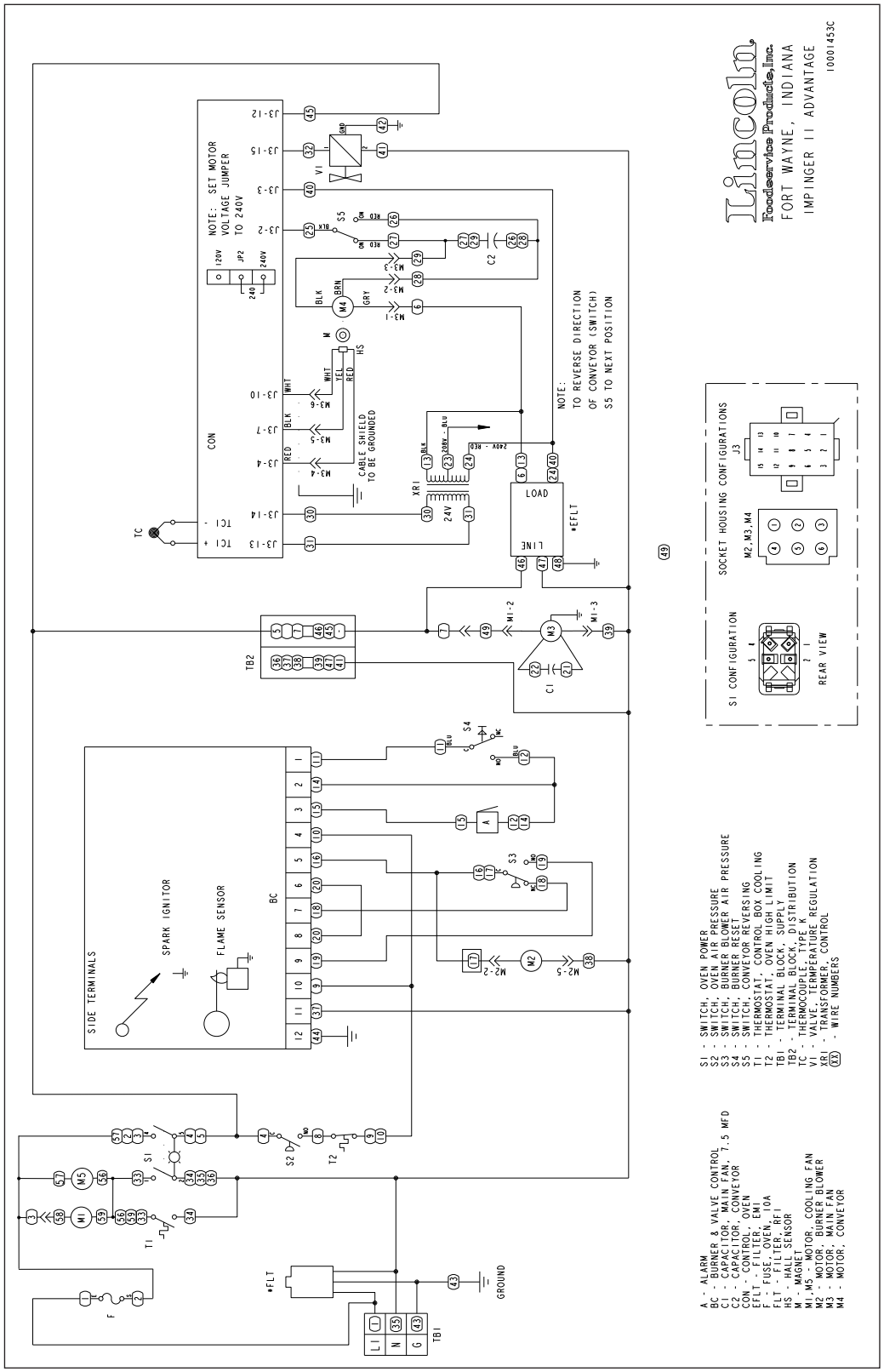

# 1154, 1155, 1157, 1158
# with Techrite Module
# Schematic - S/N 1902100102505 to S/N 2111100101007

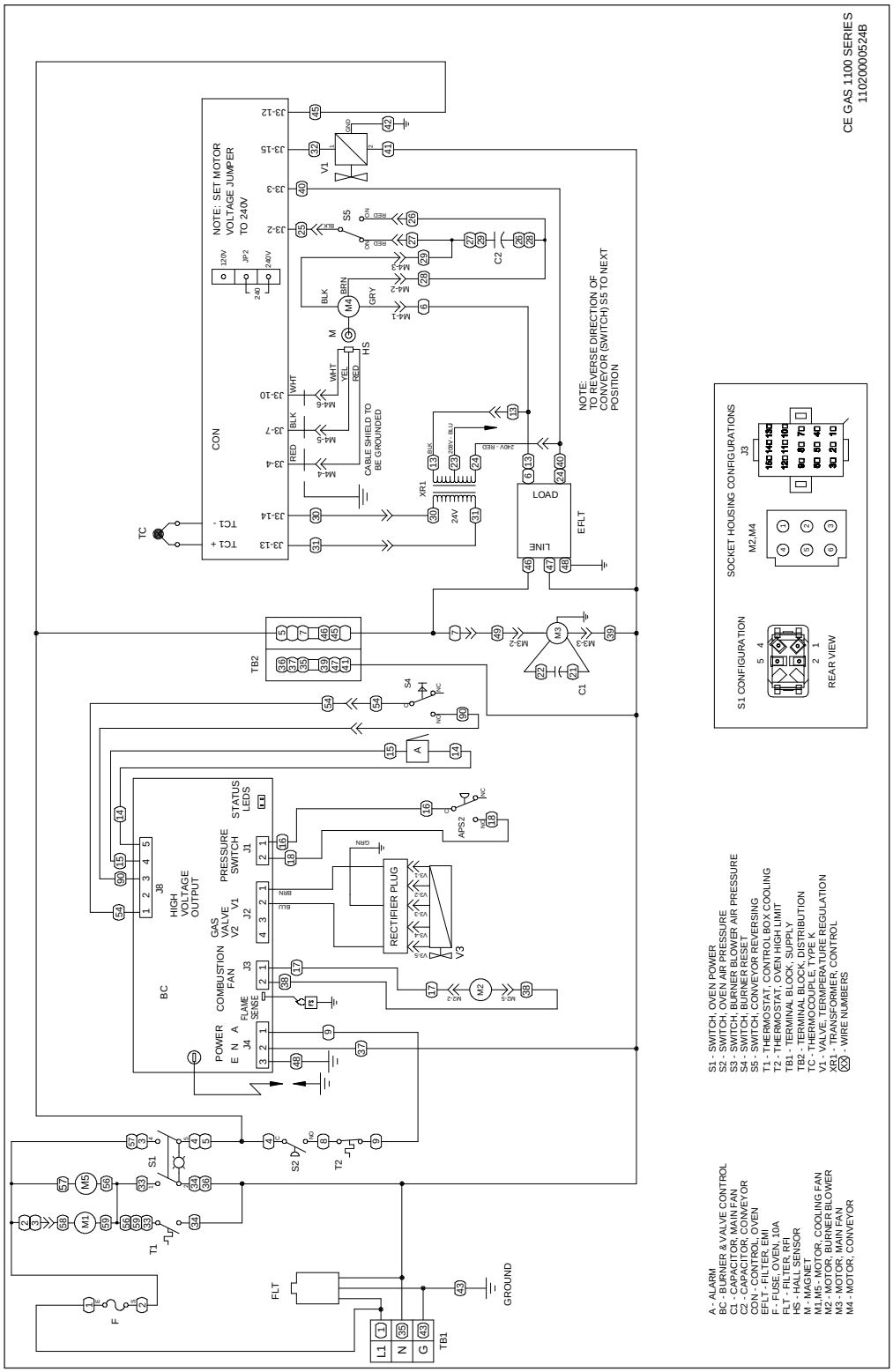

# 1154, 1155, 1157, 1158
# Split Belt Schematic - S/N 1902100102505 and Below

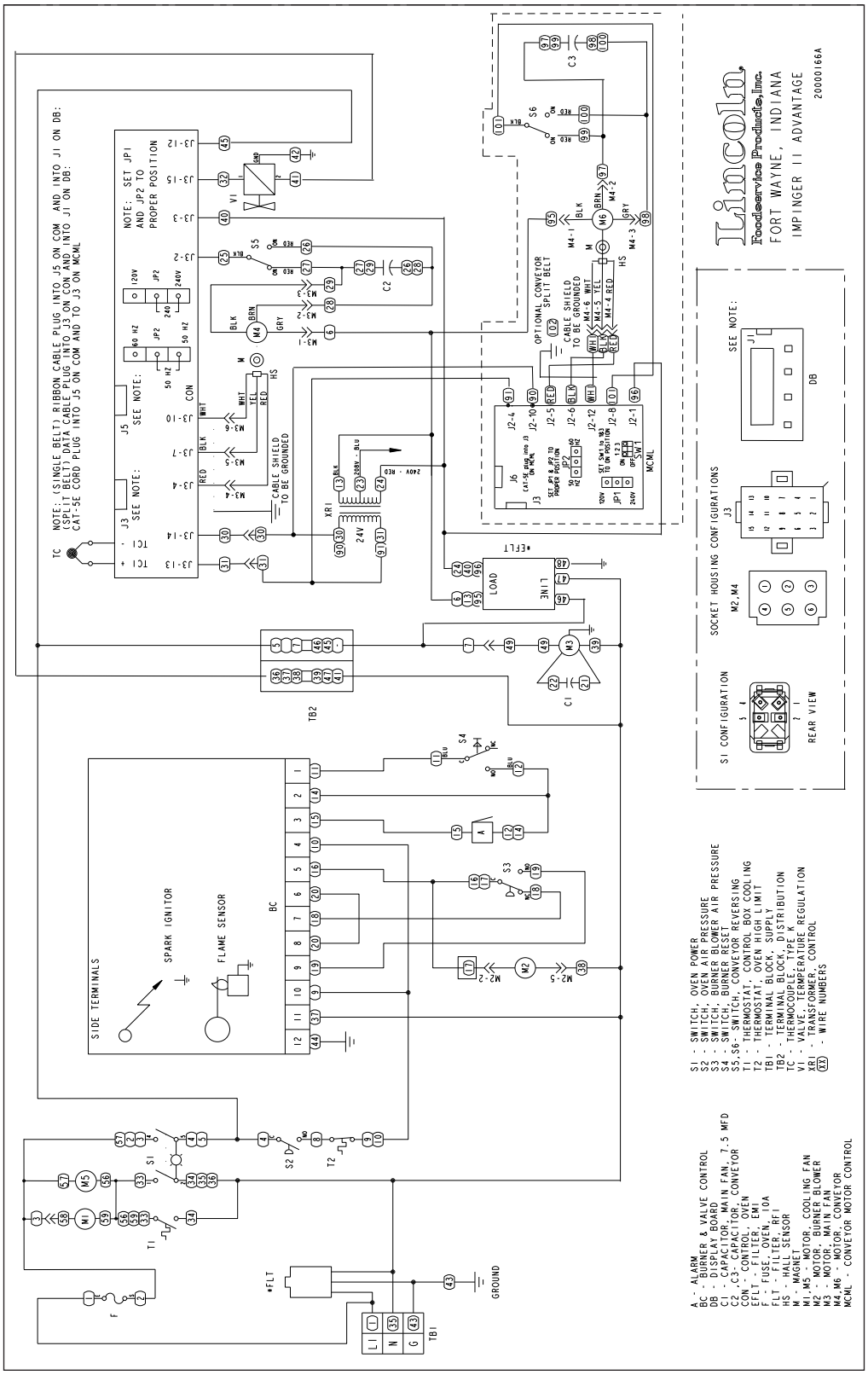

# 1154, 1155
# easyTouch Schematic - S/N 2111100101008 and Above

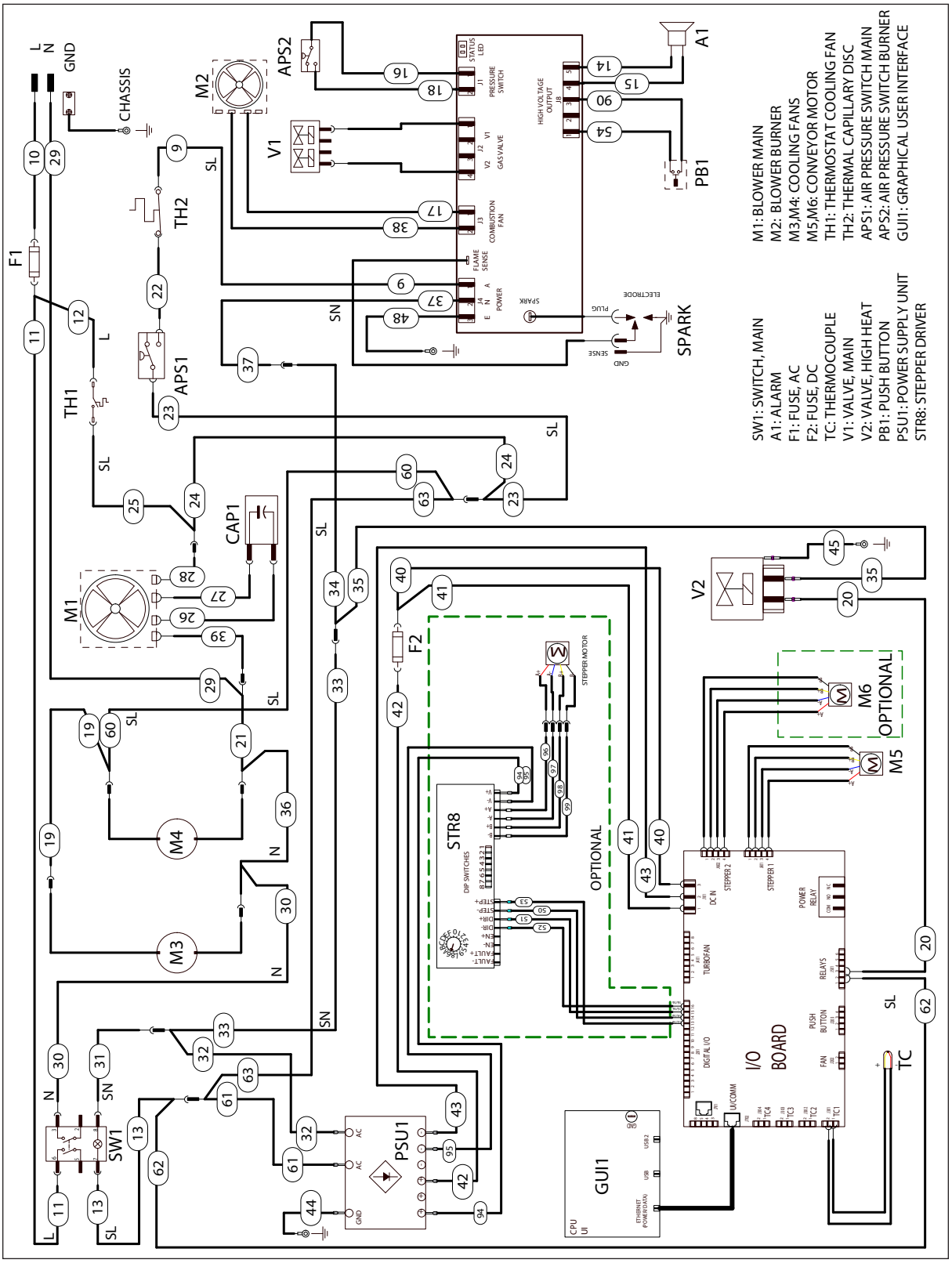

# 1157, 1158
# easyTouch Schematic -S/N 2111100101008 and Above

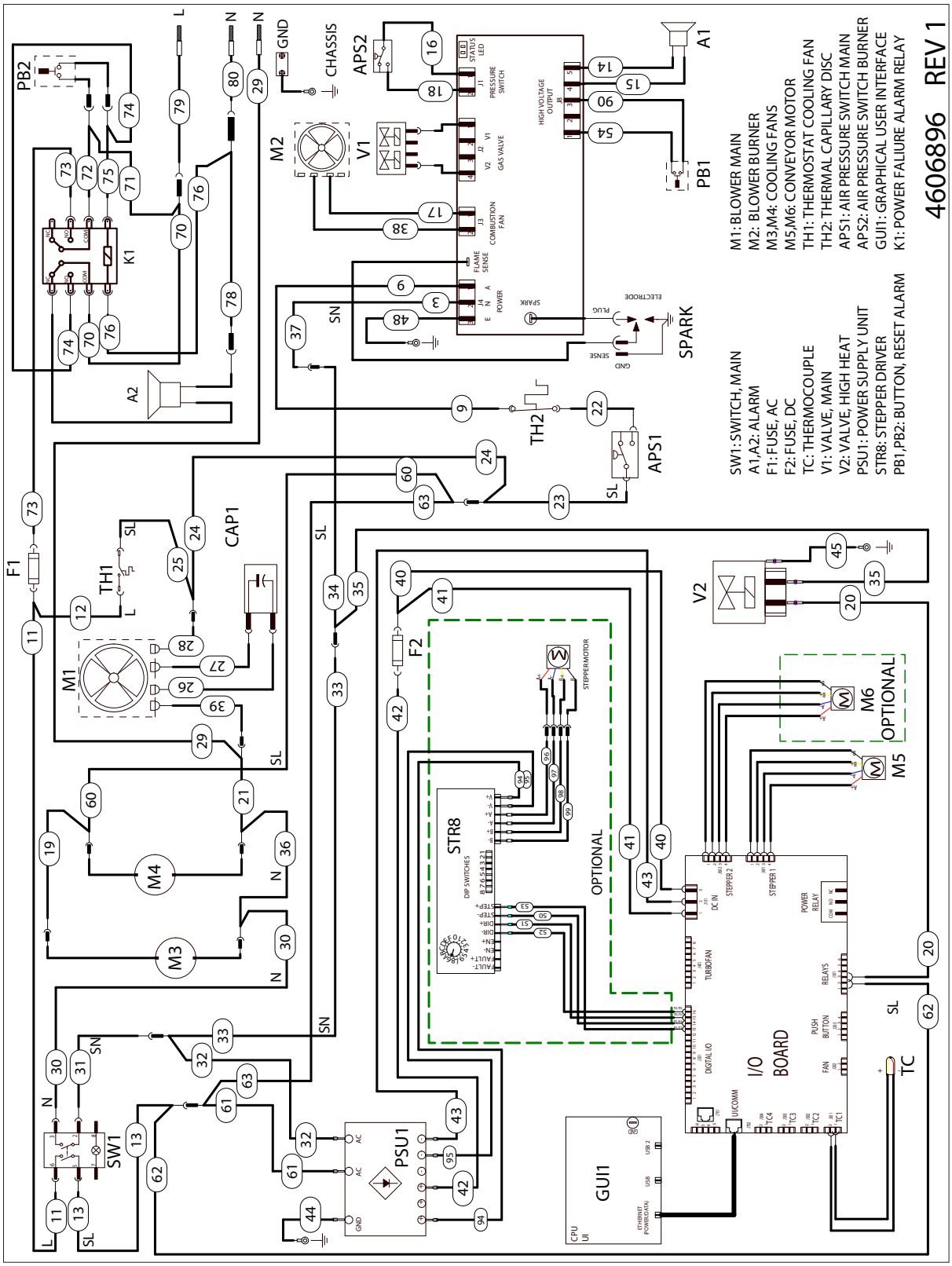

# 1130-080-A, 1130-080-A1, 1131-080-A, 1131-080-A1
# S/N: 0809210000015 and Below
# Schematic

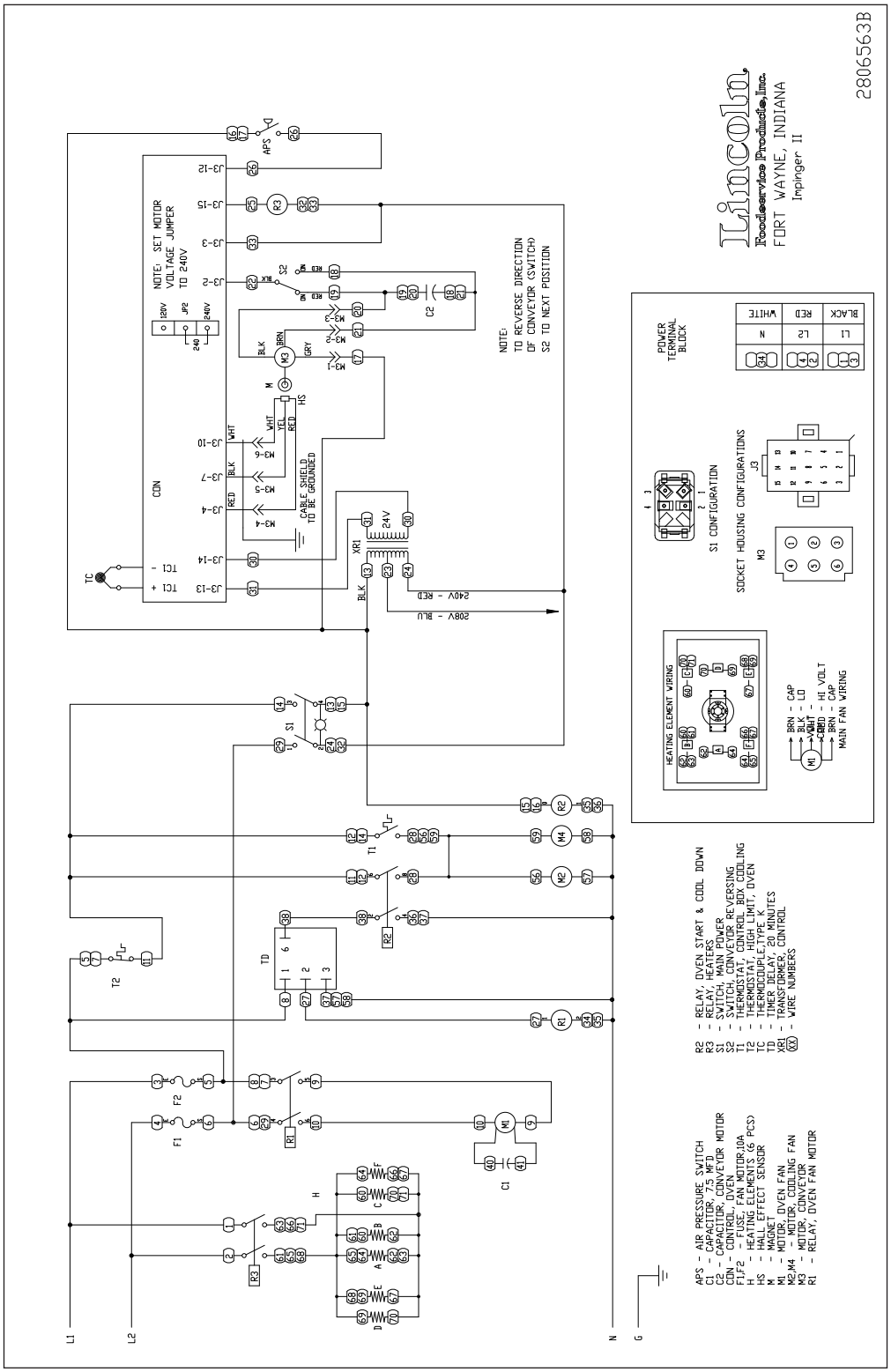

# 1132-080-A, 1132-080-A1, 1133-000-A, 1133-080-A1
# S/N: 0809210000015 & and Below
# Schematic

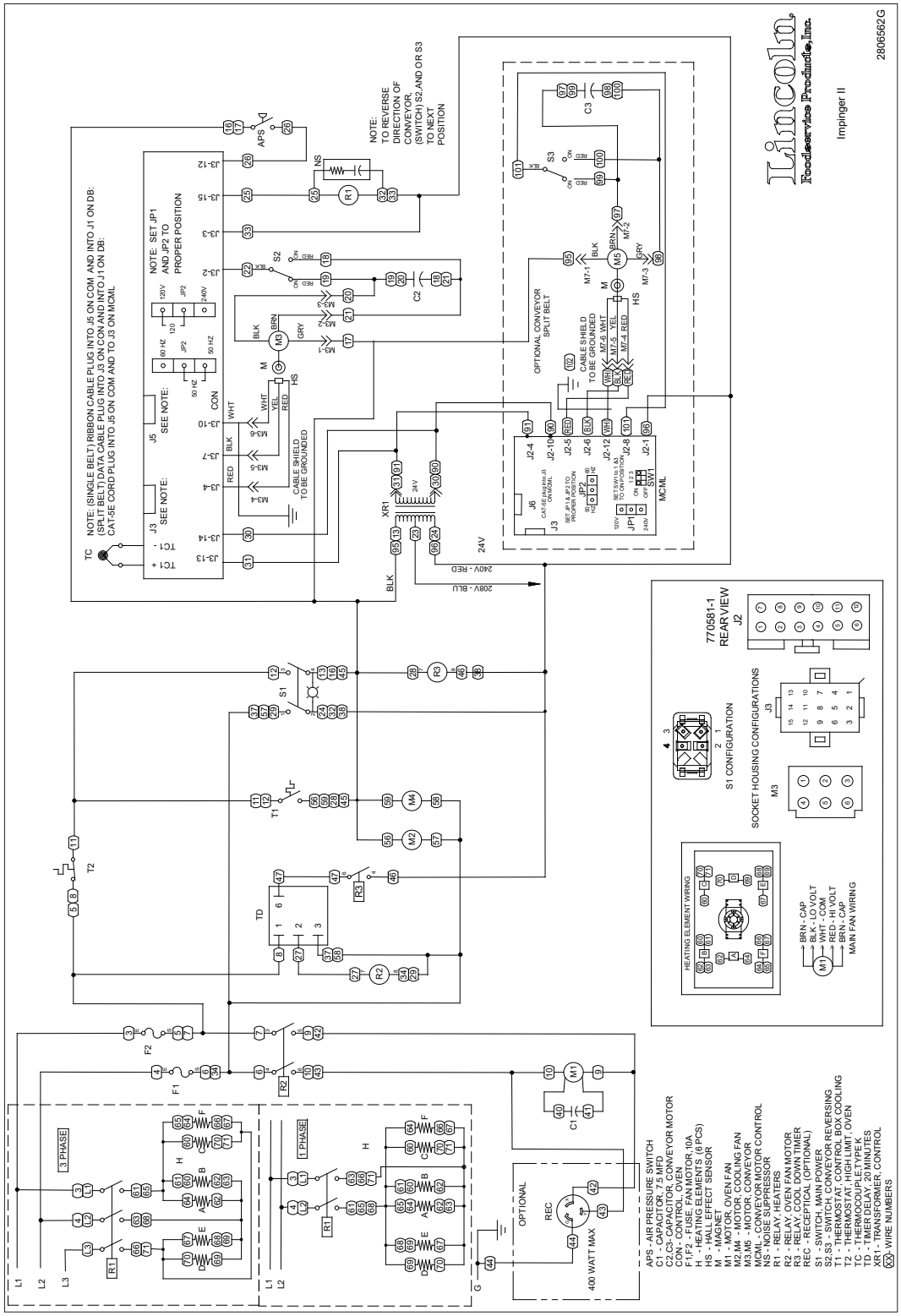

# 1130, 1131, 1132, 1133
# Schematic - S/N 0809210000017 and Above

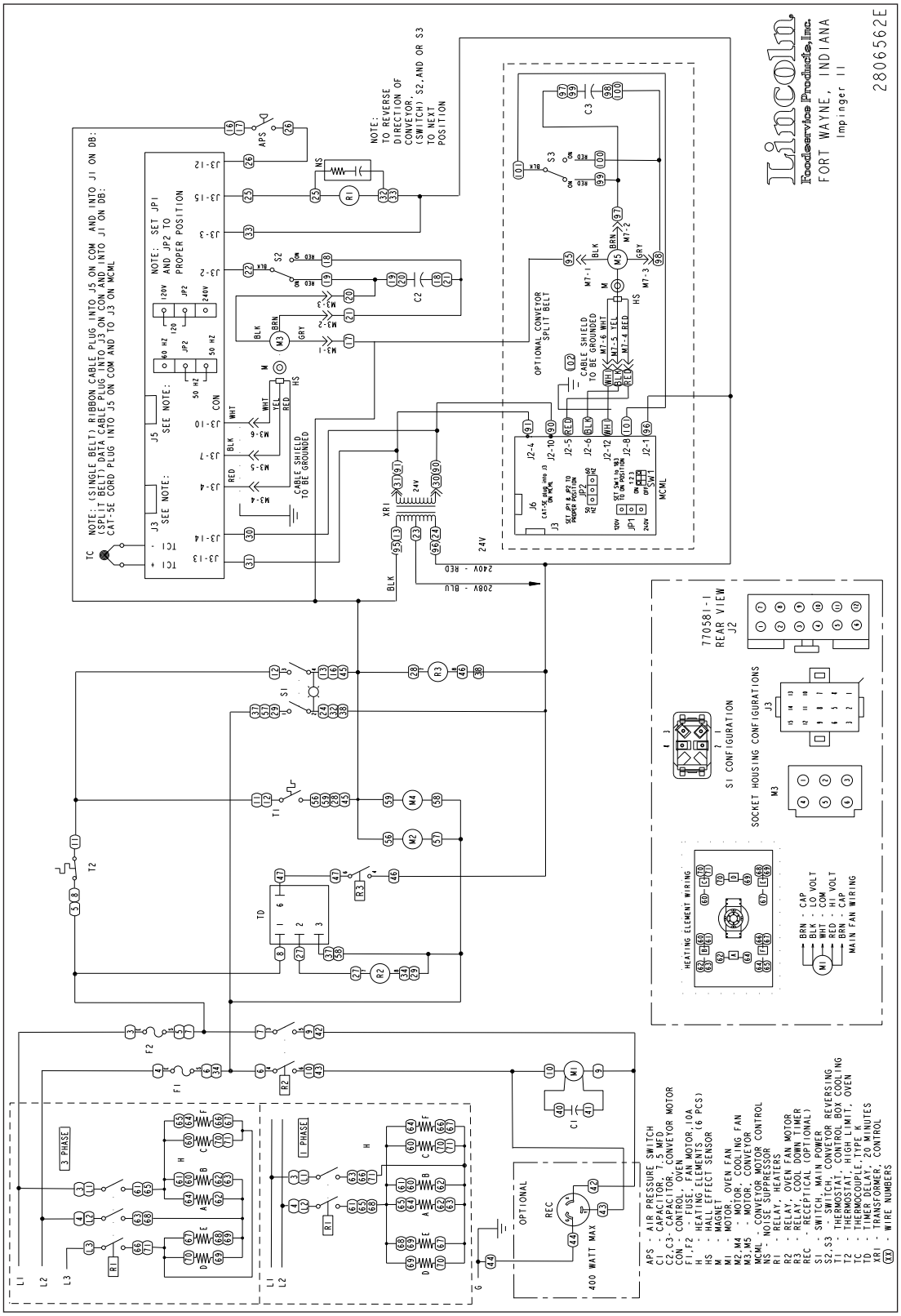

# 1132-002
# Schematic - S/N 0809210000017 and Above

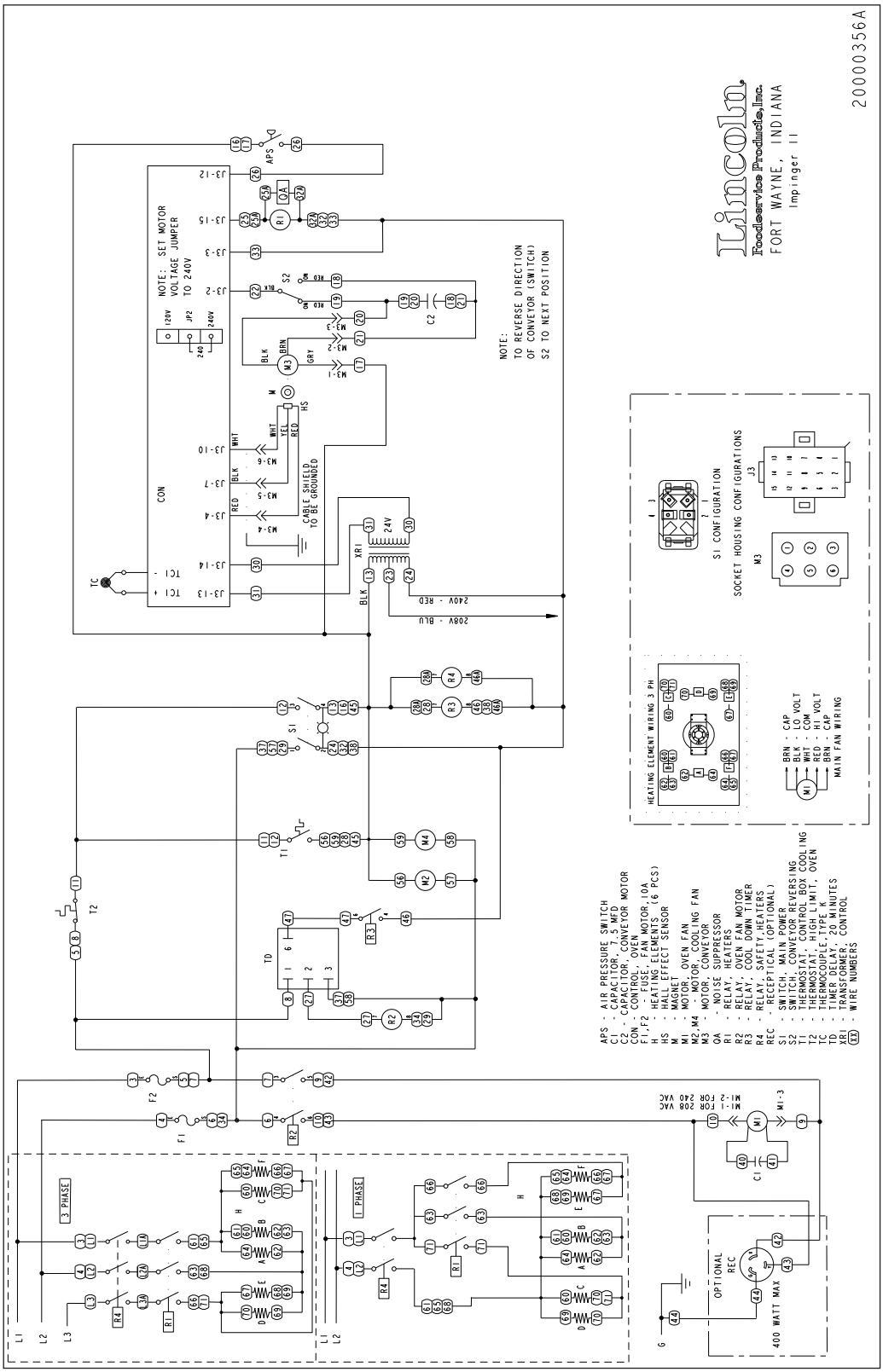

# 1130, 1131
# easyTouch Schematic - S/N 2104100102813 and Above

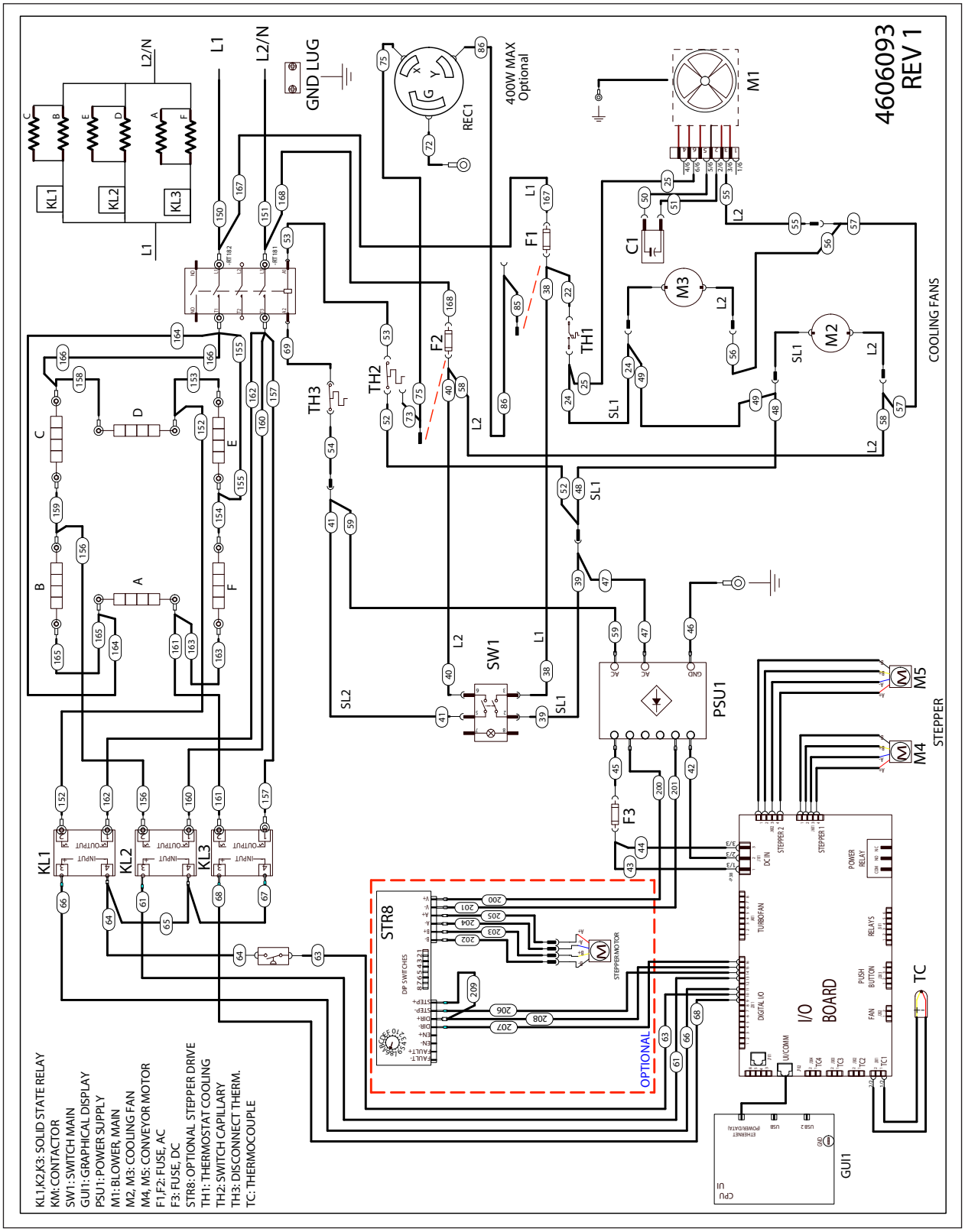

# 1132, 1133
# easyTouch Schematic - S/N 2104100102813 and Above

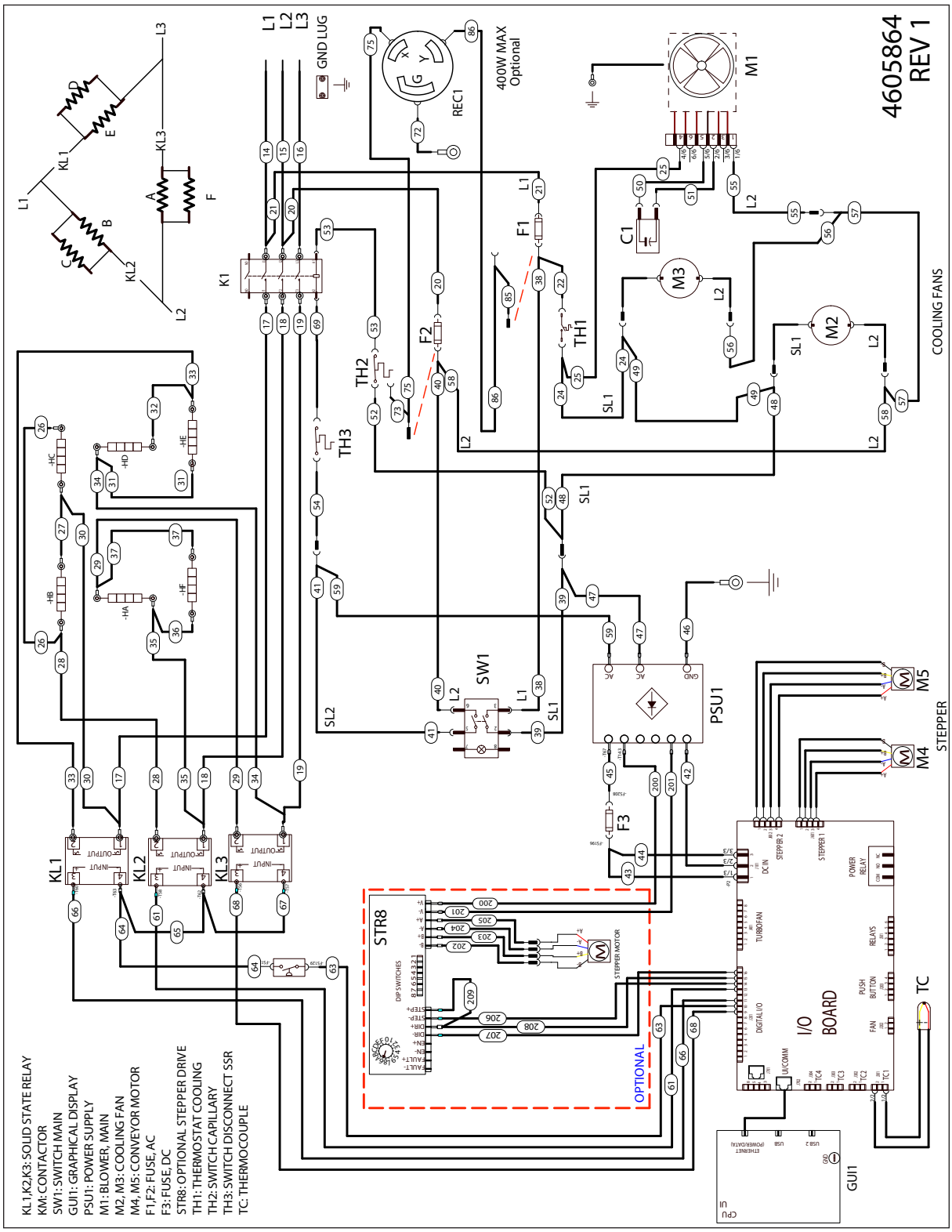

# 1134
# Schematic - S/N 2104100102812 and Below

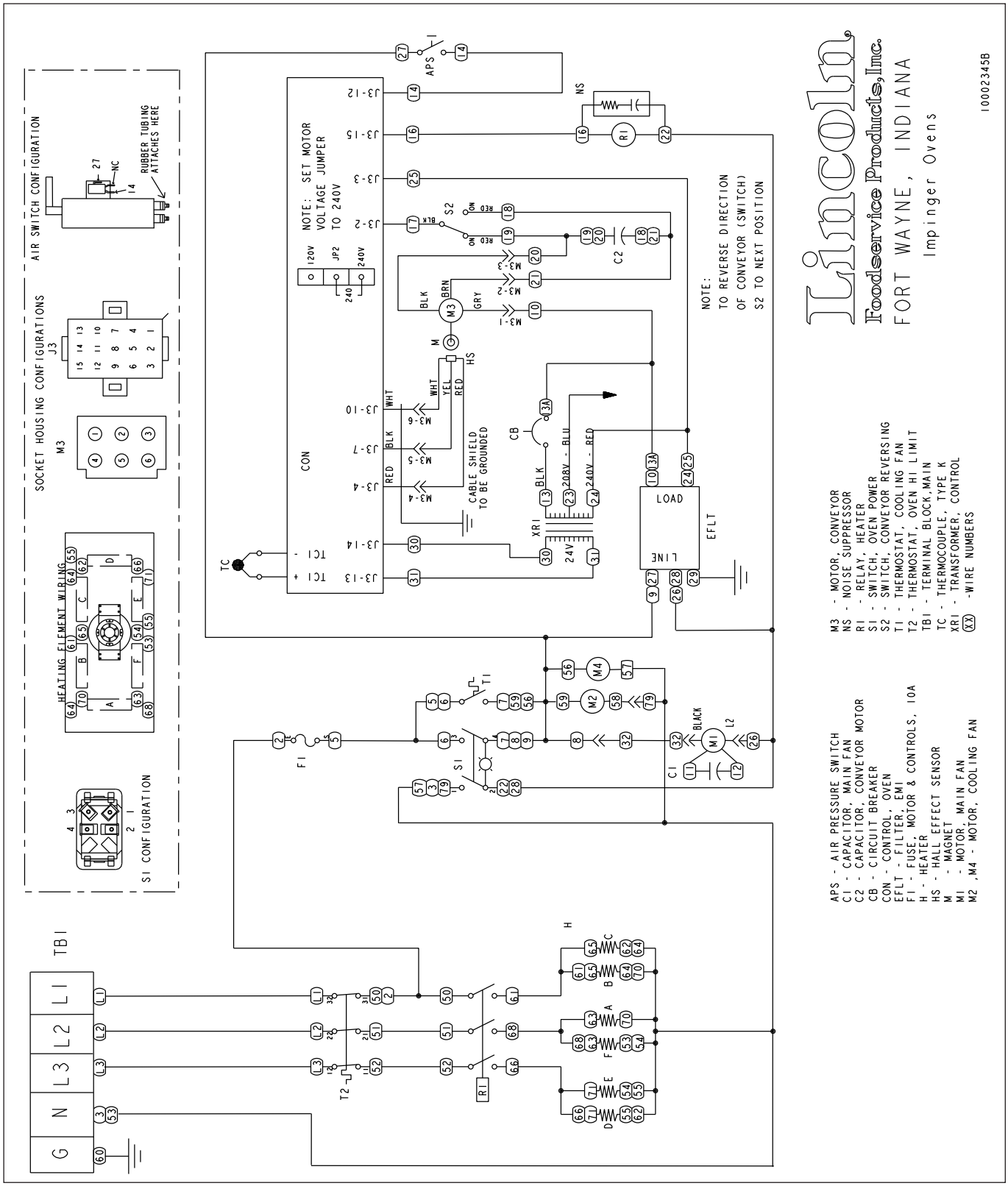

# 1135
# Schematic - S/N 2104100102812 and Below

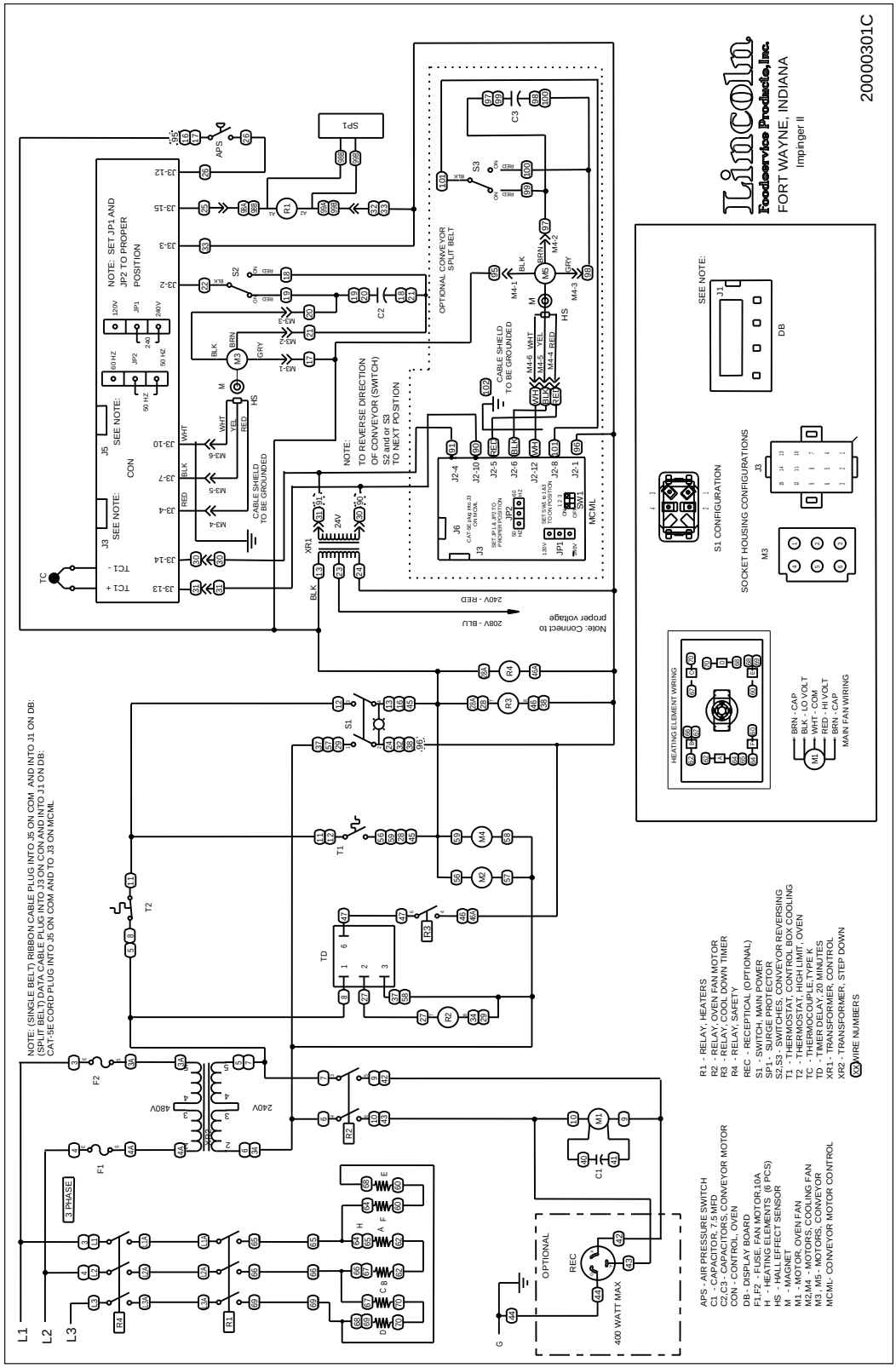

# 1164
# Schematic - S/N 2201100100577 and Below

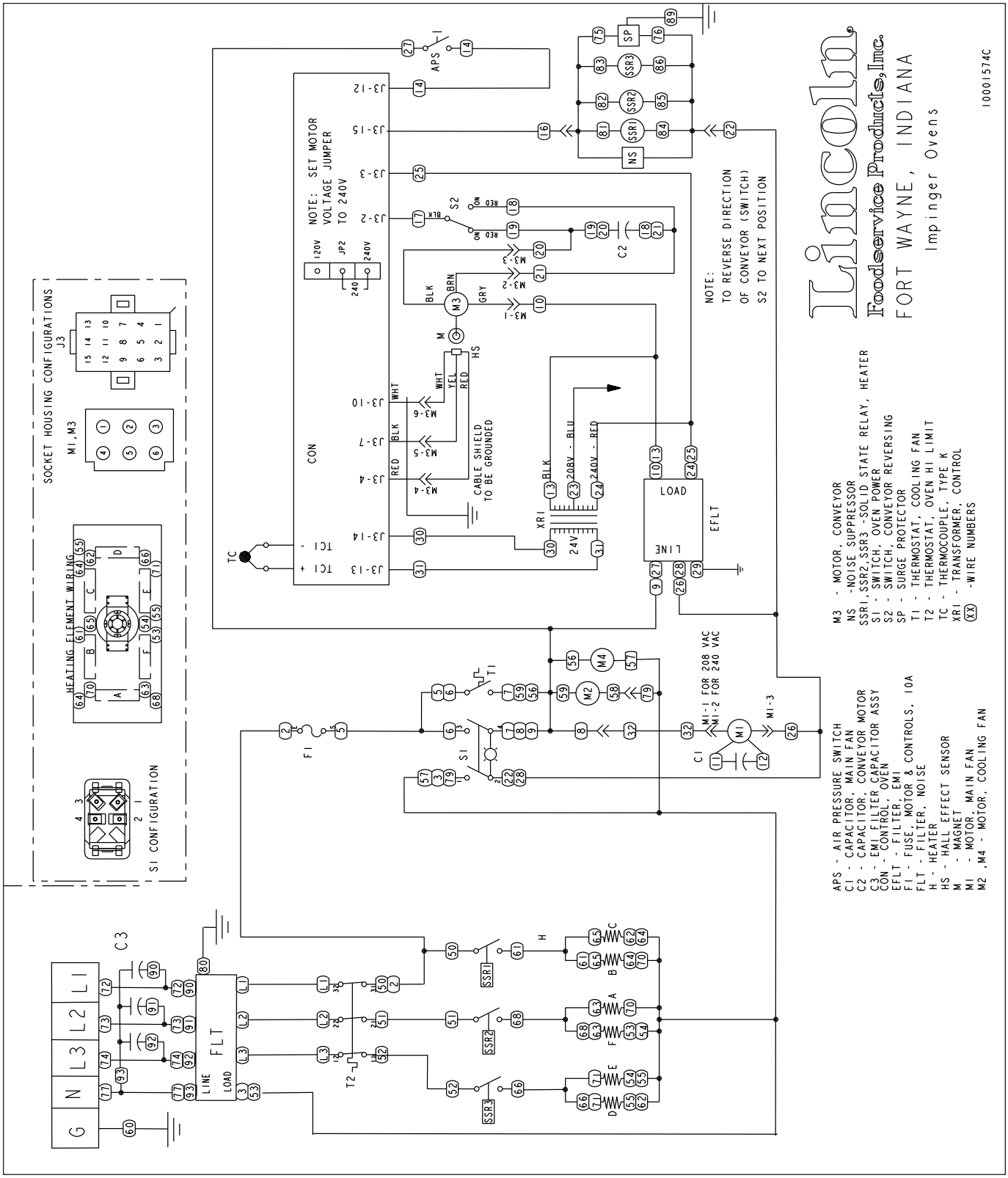

# 1164
# Split Belt Schematic - S/N 2201100100577 and Below

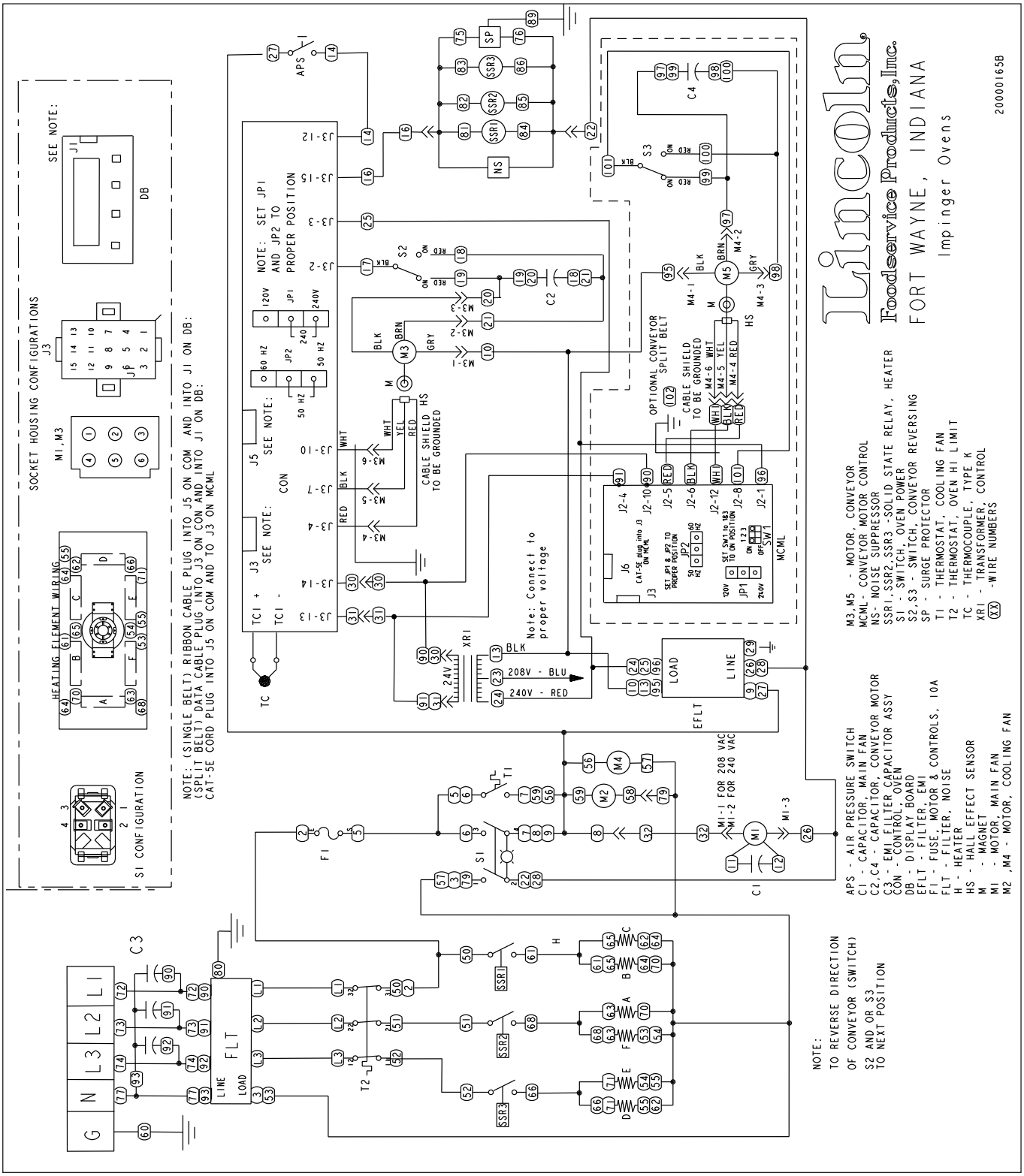

# 1164
# easyTouch
# Schematic - S/N 2201100100578 and Above

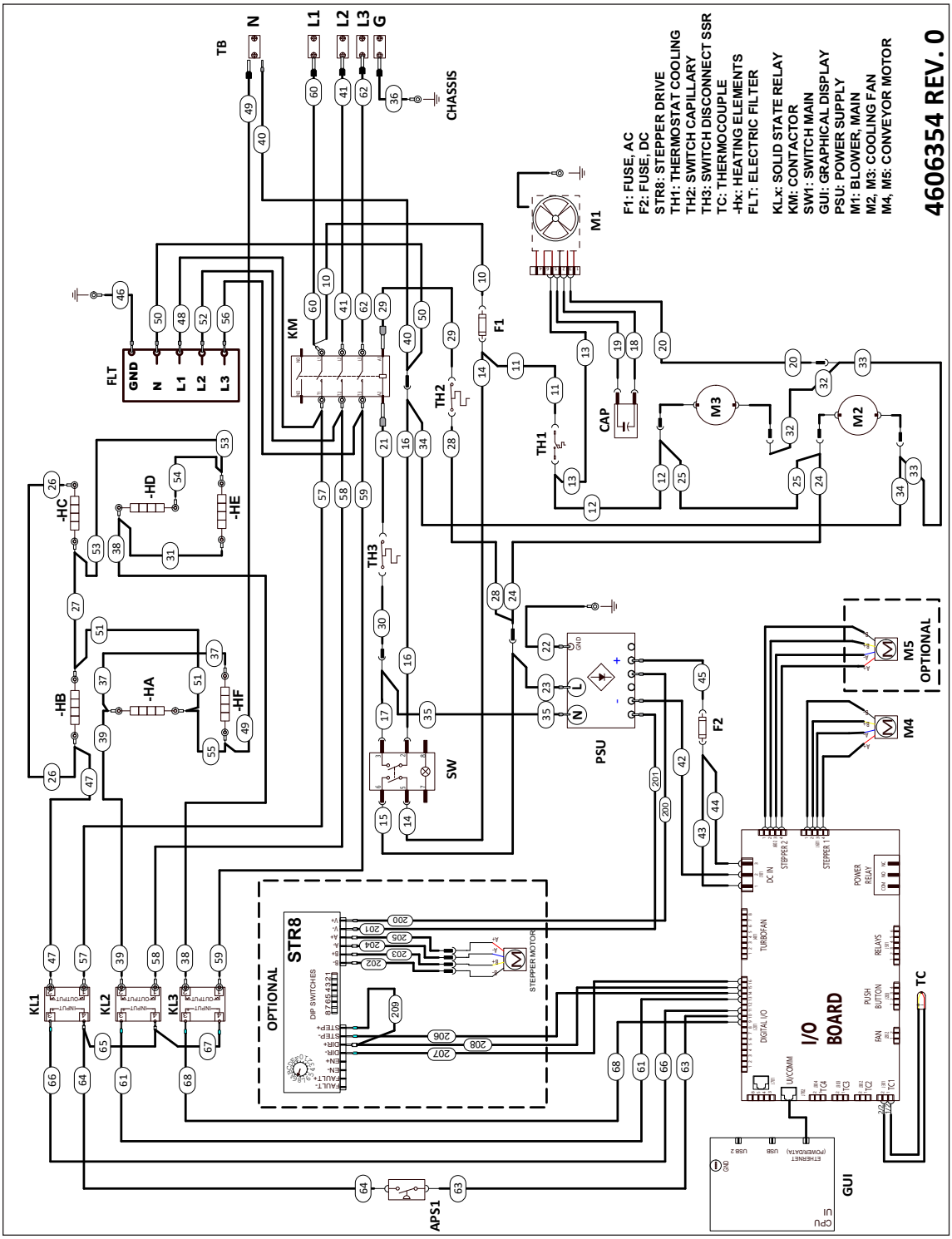

LINCOLN
A Welbilt Brand

## Lincoln Impinger / Aperion Start-Up

**Note:** Use A Separate Form for Each Oven

**M/N:** _____ **S/N:** _____

How many ovens are at this location _____ Is this oven the: Top Middle Bottom

Customer's Name: _____ Store #: (If Applicable) _____

Address: _____ City: _____

State: _____ Zip Code: _____ Location's PH#: _____

Service Agency: _____ Technician: _____

1. Has the oven been running prior to start-up, YES / NO If "YES" how many days? _____
2. Is restraining device in place? YES / NO If "NO" explain _____
3. Make sure that single and/or stacked ovens are installed as required in the Installation and Operating Instructions for this model. Please **Provide a picture of the oven in place:**
   Single _____ Stacked _____ Legs _____ Stand _____ Casters _____ Other _____
4. Instruct operator and staff how to disassemble, clean, and "reassemble" the oven. Include fingers, retaining brackets and conveyors.
5. Check to insure proper electrical connection of each oven. Is grounding lug in junction box connected to proper ground wire? _____
   Does each oven have a separate electrical service (circuit breaker)? _____
   Does each oven have its own neutral wire which runs all the way back to the circuit breaker panel? _____
   **NOTE:** IF INCOMING VOLTAGES ARE NOT CORRECT, DO NOT OPERATE OVEN(S).
6. Is Lincoln gas shut off valve (369081 supplied) installed properly on each oven? _____
   **Note:** Check for gas leaks with bubble soap, and DO NOT OPPERATE OVEN(S) if a leak can not be tightened.
7. What is the incoming main line gas pressure at the oven with oven turned OFF: _____"WC/MB/MM
   Incoming main line gas pressure at each oven with ovens turned ON: _____"WC/MB/MM.
8. With all ovens "ON" Set gas manifold pressure and record here:
   Right Side _____"WC/MB/MM Left side (1600 series only) _____"WC/MB/MM
9. With ovens "OFF", check and record incoming voltages.
   Please refer to specification plate for proper voltages and schematic for proper connections.
   L1-N_____VAC L1-L2_____VAC
   L2-N_____VAC L2-L3_____VAC
   L3-N_____VAC L1-L3_____VAC
10. Check and record incoming voltage and amperage (electric ovens only).
    **NOTE:** HEATING ELEMENTS MUST BE "ON".
    L1-N_____VAC L1-L2_____VAC L1_____Amps
    L2-N_____VAC L2-L3_____VAC L2_____Amps
    L3-N_____VAC L1-L3_____VAC L3_____Amps
11. Check conveyor belt speed. (Leading edge in, leading edge out) _____
12. With oven on, disconnect power wire to main fan motor. As fan gradually slows, safety circuits will open, removing power from "Heating System". If this does not happen, adjust controls accordingly. _____
13. Check and calibrate oven temperature _____ (See service manual for proper calibration procedure).
14. Perform smoke candle test (P/N:369361).
    (Circle one) NO HOOD 0% 20% 40% 60% 80% 100%
    Note: For "Ventilation Information" Please refer to the installation operations manual.
15. Turn off the ovens(s) and record the time elapsed until oven cool down is complete and the final temperature reading. NOTE: Not all ovens have cool down timers. Time (if applicable) _____ Temp _____

I _____, accept this Start-up to be complete and accurate on this date of _____.

**NOTE: START UP FORM MUST BE FILLED OUT COMPLETELY AND CORRECTLY BEFORE CREDIT WILL BE ISSUED!**
**Please send this Start up and pictures of the oven to your warranty department for proper filling.**

P/N 2802427

**Impinger® II Express**
**easyTouch & Digital**
**Series 1100 Series Conveyor Oven**
**Start up Form**

LincolnFp.com

## LIMITED WARRANTY, TERMS AND CONDITIONS

### LINCOLN EQUIPMENT LIMITED WARRANTY

Lincoln Foodservice ("Lincoln") warrants this product to be free from defects in material and workmanship as follows:

- 2424 Electric, Electric Ventless and Gas ovens for a period of two (2) years from date of purchase
- Equipment must be installed within 12 months from date of manufacture.

Note: Warranty terms may vary based on agreement at time of purchase.

During the warranty period, Lincoln shall repair or, at Lincoln's option, replace parts determined by Lincoln to be defective in material or workmanship, and with respect to services, shall re-perform any defective portion of said services. The foregoing shall be the sole obligation of Lincoln under this Limited Warranty with respect to the equipment, products and services. With respect to equipment, materials, parts and accessories manufactured by others, Lincoln's sole obligation shall be to use reasonable efforts to obtain the full benefit of the manufacturers' warranties. Lincoln shall have no liability, whether in contract, tort, negligence, or otherwise, with respect to non-Lincoln manufactured products.

## WHO IS COVERED

This Limited Warranty is available only to the original purchaser of the product and is not transferable.

## EXCLUSIONS FROM COVERAGE

- Repair or replacement of parts required because of misuse, improper care or storage, negligence, alteration, accident, use of incompatible supplies or lack of specified maintenance shall be excluded.
- Normal maintenance items, including but not limited to, fuses, conveyor belt, conveyor bearings, interior and exterior finishes, lubrication, oven pass-through glass door, door hinges, etc.
- Adjustments and calibration of temperatures, speed and air flows.
- Failures caused by erratic voltages or gas supplies.
- Any travel costs beyond 100 miles roundtrip or 2 hours travel other than overland, overtime, holiday charge, and any special arrangement.
- Any travel costs above actual time (One-way travel ONLY paid).
- Any charges additional to the SRT (Standard Repair Times) will be authorized and paid at the discretion of Lincoln.
- Improper or unauthorized repair.
- This Limited Warranty will not apply to any parts subject to damage beyond the control of Lincoln, or to equipment which has been subject to alteration, misuse or improper installation, accidents, damage in shipment, fire, floods, power changes, other hazards or acts of God that are beyond the control of Lincoln.
- This Limited Warranty does not apply and shall not cover any products or equipment manufactured or sold by Lincoln when such products or commercial equipment is installed or used in a residential or non-commercial application. Installations not within the applicable building or fire codes render this Limited Warranty and any responsibility or obligations associated therein null and void. This includes any damage, costs or legal actions resulting from the installation of any Lincoln manufactured commercial cooking or warming equipment in a non-commercial application or installation, where the equipment is being used for applications other than those approved for by Lincoln.
- With respect to equipment, materials, parts and accessories manufactured by others, Lincoln's sole obligation shall be to use reasonable efforts to obtain the full benefit of the manufacturers' warranties. Lincoln shall have no liability, whether in contract, tort, negligence, or otherwise, with respect to non-Lincoln manufactured products.

## LIMITATIONS OF LIABILITY

The preceding paragraphs set forth the exclusive remedy for all claims based on failure of, or defect in, products or services sold hereunder, whether the failure or defect arises before or during the warranty period, and whether a claim, however instituted, is based on contract, indemnity, warranty, tort (including negligence), strict liability, implied by statute, common-law or otherwise. Lincoln, its servants and agents shall not be liable for any claims for personal injuries or consequential damages or loss, howsoever caused. Upon the expiration of the warranty period, all such liability shall terminate. THE FOREGOING WARRANTIES ARE EXCLUSIVE AND IN LIEU OF ALL OTHER WARRANTIES, WHETHER WRITTEN, ORAL, IMPLIED OR STATUTORY. NO IMPLIED WARRANTY OF MERCHANTABILITY OR FITNESS FOR PARTICULAR PURPOSE SHALL APPLY. LINCOLN DOES NOT WARRANT ANY PRODUCTS OR SERVICES OF OTHERS.

## REMEDIES

- The liability of Lincoln for breach of any warranty obligation hereunder is limited to: (i) the repair or replacement of the equipment on which the liability is based, or with respect to services, re-performance of the services; or (ii) at Lincoln's option, the refund of the amount paid for said equipment or services.
- Any breach by Lincoln with respect to any item or unit of equipment or services shall be deemed a breach with respect to that item or unit or service only.

## WARRANTY CLAIM PROCEDURE

- Immediately advise the Dealer or Lincoln's Factory Authorized Servicer of the equipment serial number and the nature of the problem.
- Verify the problem is a factory responsibility. Improper installation or misuse of equipment are not covered under this Limited Warranty.
- Cooperate with the Service Agency so that warranty service may be completed during normal working hours.

## GOVERNING LAW

Limited Warranty shall be governed by the laws of the state of Delaware, USA, excluding their conflicts of law principles. The United Nations Convention on Contracts for the International Sale of Goods is hereby excluded in its entirety from application to this Limited Warranty.

## INTERNATIONAL SALES POLICY

International sales orders submitted by US dealers are subject to the following up charge:

•
2424 Asperion Whisper Oven – 20%
•
Impinger II, Impinger I, Low Profile, 3200 Series ovens - 20%.
•
Countertop Oven (DCTI - 2500 series) - 15%.
All shipments FOB Covington, TN 38019

THIS PAGE INTENTIONALLY LEFT BLANK

LINCOLN
1177 KAMATO ROAD, MISSISSAUGA, ONTARO, CANADA
L4W 1X4

844.724.2273
WWW.LINCOLNFP.COM.




Document #: LIN_EOGO_SM_IMPII_S1100_4608349 – 01/22